Electric Field Distribution in Bolted Busbar Connections with Slotted Holes

Raina T. Tzeneva[1], Yanko T. Slavtchev[2] and Mikel Octavio[3]

Abstract – **The paper discusses how the bolt holes, of bolted busbar connections, influence the change of electric field distribution, when the holes are slotted in an effort to increase significantly the true contact area and reduce the contact resistance. The new hole profile, featuring 4 slots of length 3mm on mutually perpendicular axes, rotated at an angle of 45 degrees in relation to the busbars axes, is compared with the classical one of bolted busbar connections by the help of several computer models. It has been estimated that the new case changes the electric field distribution in the connection. Additionally, the Joule heat distribution in the buses and in the rest of the connection parts is investigated.**

Keywords – **bolted busbar connections, slotted hole shape, contact resistance, electric field distribution, Joule heat distribution**

I. Introduction

During the past years, reliability operation requirements of high power connections have grown significantly due to the rapidly increased consumption of electric energy worldwide.

The design fundamentals for reliable high-power connections used in bare overhead lines are given in [1] and they include: maximization of true area of electrical contact, optimization of frictional forces, minimization of creep and stress relaxation, minimization of fretting and galvanic corrosion, minimization of differential thermal expansion along interfaces and normal to interfaces. A new bolt-hole shape for bolted busbar connections is proposed [3]. It features 4 slots on mutually perpendicular axes, rotated at an angle of 45 degrees in relation to the busbar axes. There were built 11 models to study the contact pressures and penetrations within the busbars contact zone. It is observed that there is a considerable raise in the values of the two studied parameters, in comparison to the classic bolted busbars case, which leads in turn to an enlarged true contact area and reduced contact resistance. In short, the reliability of the connection will be improved.

THE OBJECTIVE of the present work is to study the effect that the slotted bolt holes in bolted busbar connections exert on the electric field distribution and Joule heat distribution within these connections.

[1]Raina T. Tzeneva is with the Department of Electric Apparatus, Faculty of Electric Engineering, 8 Kliment Ohridski, 1000 Sofia, Bulgaria, E-mail: tzeneva@tu-sofia.bg

[2]Yanko T. Slavtchev is with the Department of Logistics and Materials Handling, Faculty of Mechanical Engineering, Technical University of Sofia, 8 Kliment Ohridski, 1000 Sofia, Bulgaria, E-mail: blamail@abv.bg

[3] Mikel Octavio is with the University of Navarra, 31080 Pamplona, Spain, E-mail: octavio@retena.com

II. Theoretical Backgrounds

Current conduction analysis is used to analyze a variety of conductive systems. Generally, the quantities of interest in a current conduction analysis are voltages, current densities, electric power losses (Joule heat).

The problems of current distribution are described by the Poisson's equation for scalar electric potential U;

$$\frac{\partial}{\partial x}\left[\frac{1}{\rho_x}\frac{\partial U}{\partial x}\right]+\frac{\partial}{\partial y}\left[\frac{1}{\rho_y}\frac{\partial U}{\partial y}\right]+\frac{\partial}{\partial z}\left[\frac{1}{\rho_z}\frac{\partial U}{\partial z}\right]=0 \quad (1)$$

where the components of the electric resistivity tensor ρ_x, ρ_y and ρ_z are constant.

The electric current density j can be obtained from the equation

$$j=-\rho^{-1}E=\rho^{-1}gradU \quad (2)$$

where ρ^{-1} is the inverse tensor of the electric resistivity.

Power losses (Joule heat produced) in a volume are

$$Q=EjdV \quad (3)$$

III. Modeling the Bolted Busbar Connection

If a deeper contact penetration increases α-spots both in numbers and dimensions, enlarges the true contact area and decreases the contact resistance, then a new hole-shape might be introduced. A typical bolted busbar connection is shown in Fig. 1.

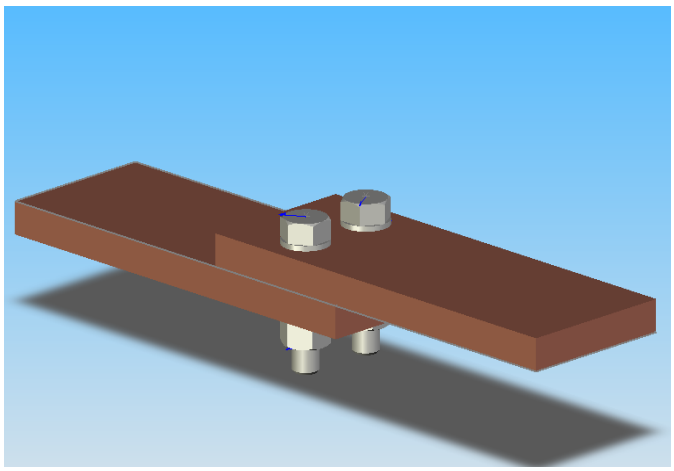

Fig. 1. A bolted busbar connection

The slotted bolt hole shape arises from [2] where longitudinal slot of width 3-4mm and length 50mm between the holes of the buses is proposed in order to increase the true

connection area. This case is modeled and compared with the classic case in [3].

For that purpose there have been investigated 11 different models.

case 1 – the classical case – copper busbars with 2 bolt holes;

case 2 – the slots are parallel to the busbar axis;

case 3 – the slots are perpendicular to the busbar axis;

case 4 – mixed case – one of the busbars in the connection is of case 2 and the other one is of case 3;

For cases 2 to 4 all bolt holes have two slots of length 3mm and width 1mm.

For cases 5 to 8 the busbar holes have 4 slots of length 3 mm and varying width, arranged in such a way that the pairs of slots are on mutually perpendicular axes, rotated at an angle of 45 degrees in relation to the busbar axes.

case 5 – width 0.3mm;

case 6 – width 0.5mm;

case 7 – width 0.7mm;

case 8 – width 1mm;

case 9 – the 4 slots are not rotated;

case 10 – mixed case – the first busbar corresponds to case 8 and the second to case 9;

case 11 – a busbar hole with 8 slots of length 3mm and width 1mm;

Fig. 2 shows the hole-shape of the two-slot cases.

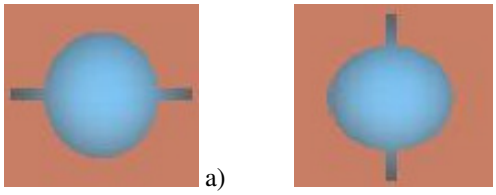

Fig. 2. Hole-shape with 2 slots

Fig. 3 presents the new hole-shape with 4 and 8 slots.

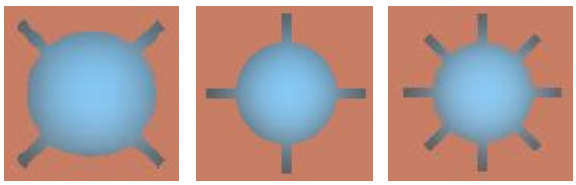

Fig. 3. Hole-shape with 4 and 8 slots

The investigated assembly consists of:

- Copper busbars (Young's modulus E = $1.1.10^{11}$Pa, Poisson's ratio μ = 0.34, width 60mm, height 10mm, length 160mm, busbars' overlap 60mm) with 2 holes of ∅10.5mm;
- Fasteners: bolts – Hex Bolt GradeB_ISO 4015 – M10 x 40 x 40 – N, steel E = 2.10^{11}Pa, μ = 0.3; nuts – Hex Nut Style1 GradeAB_ISO 4032 – M10 – W – N, steel E = 2.10^{11}Pa, μ = 0.3; washers – Plain Washer Small Grade A_ISO 7092 – 10, steel E = 2.10^{11}Pa, μ = 0.3. Tension in each bolt F = 15000N.

Several computer models smooth the research progress of the current density and Joule heat distribution changes that take place within the components of the bolted busbar connection, due to the introduced slotted bolt holes. The FEA package ANSYS 10 is employed in the analysis of the electric field and the Joule heat distributions. The model is meshed with the SOLID 98 element – Tetrahedral Coupled-Field Solid. It is defined by ten nodes with up to six degrees of freedom at each node.

The current density distribution in the bolted busbar assembly with 4 slots of length 3 mm and width 0.5 mm (case 3) is shown in Fig. 4.

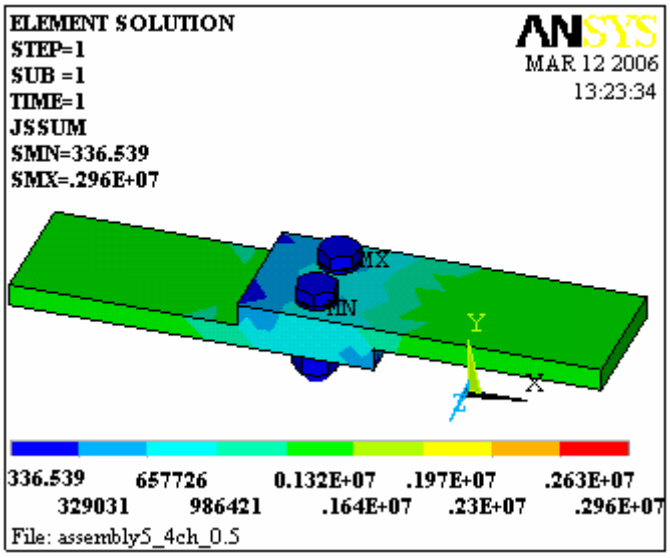

Fig. 4. Current density distribution in the bolted assembly for case 3

Fig. 5 represents the Joule heat distribution in the assembly for the same case.

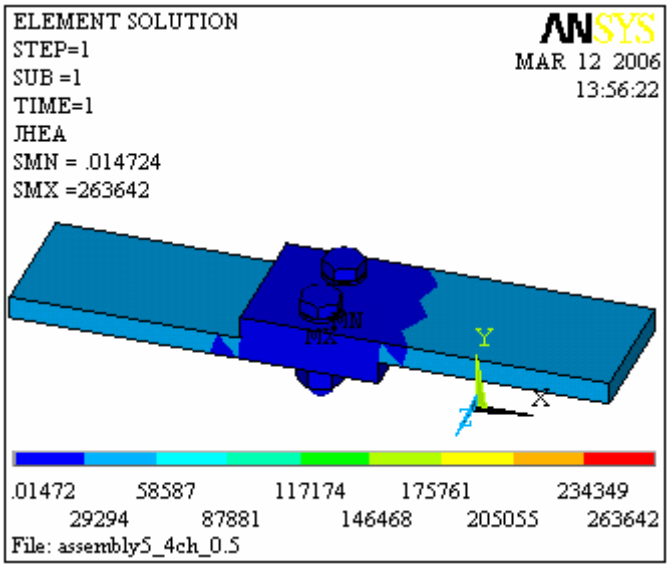

Fig. 5 Joule heat distribution in the bolted busbar assembly for case 3

The maximum current density value for each of the invest-ttigated cases is shown in Fig. 6.

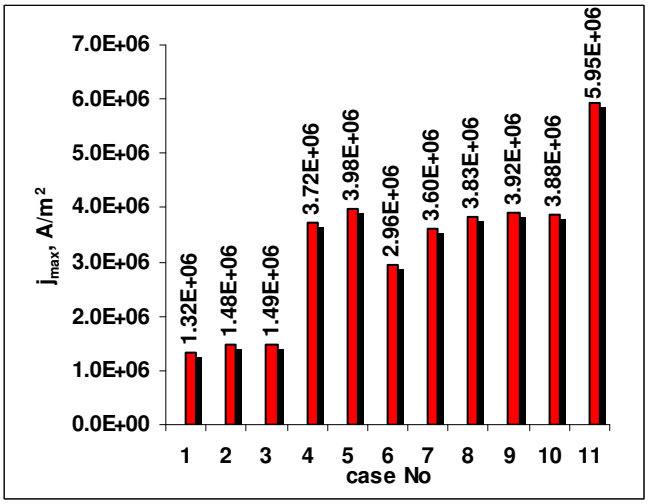

Fig. 6. Maximum value of the bolted busbar assembly current density

Additionally, the impact of the hole slots on the current density within the fasteners (bolts, nuts and washers) and the busbars is considered. Fig. 7 reviews the model current density distribution in the bolt, nut and washer for case 5 while Fig. 8, Fig. 9 and Fig. 10 summarize graphically the corresponding fastener results for each of the eleven studied cases.

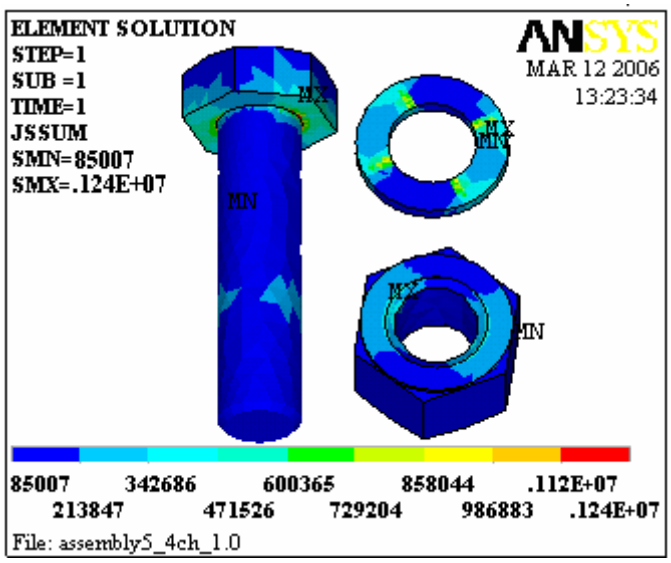

Fig. 7. Bolt, nut and washer current density distribution for case 5

IV. Discussion and Conclusions

It is observed that the introduction of slotted bolt holes raises significantly the contact pressure and penetration within the busbars contact area [3]. This will help to decrease the contact resistance and will provide an opportunity for more reliable assembly operation.

The analyses of the fasteners current density distribution for the entire range of the studied cases confirm that:

- the max assembly current density remains unaffected regardless of the two introduced slots orientation – either parallel or perpendicular to the busbars axes (Fig. 6); the same holds for the bolts (Fig. 7), nuts (Fig. 8) and washers (Fig. 9).

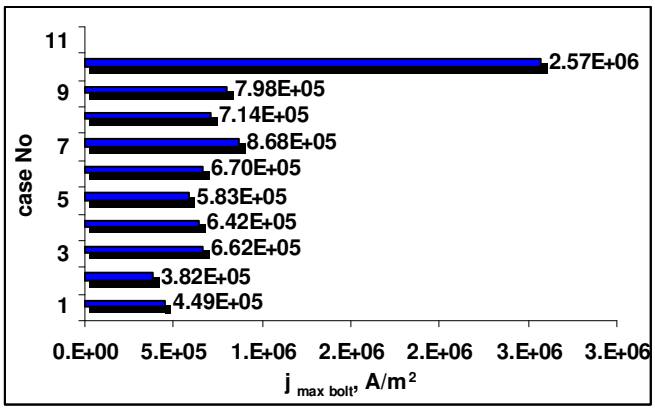

Fig. 8. Maximum value of the bolt current density

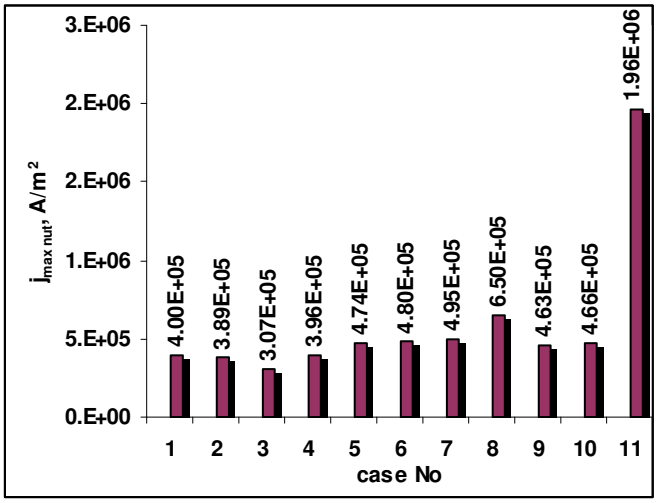

Fig. 9. Maximum value of the nut current density

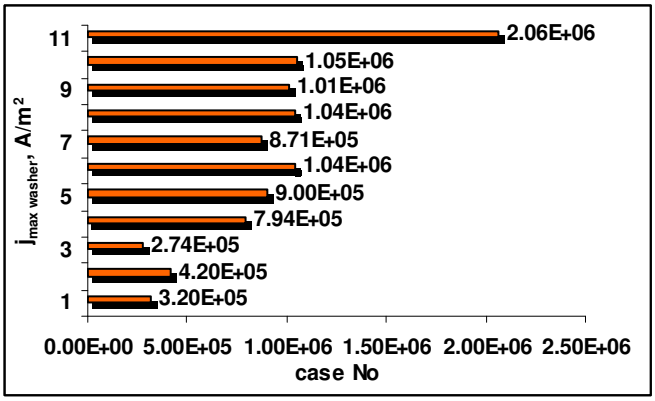

Fig. 10. Maximum value of the washer current density

- the max assembly current density value is between 2.5 and 3 times higher for the 4-slot cases than for the classic case, regardless of the slots width and position; in most cases the max value is concentrated within very small zones at the slot ends and edges; the max value within the bolts is situated near the edge of the bolts head-to-neck transition and is about 1,5 to 1,8 times higher compared to the classical case; the nuts max current density value in most cases is approximately the same or a little (1,6 times) higher compared to the classical

case; the washers max current density value is 2,5 to 3 times higher than for the classical case and is located in the zones contacting the slots near the bolt holes;

- the max current density values increase significantly within all of the assembly parts when introducing 8 slots of width 1mm and length of 3mm; it is 4.5, 5.7, 4.9 and 6.4 times higher respectively for the assembly, the bolts, the nuts and the washers.

When the bolt-holes of bolted busbar connections are slotted, the max current density value in the assembly and the fasteners increases significantly. Considering the busbars, it is concentrated in very small zones, around the slot ends and edges. As for the bolts, it is around the edge under the head of the bolts while for the washers – it is in the slots-washer contact zone.

The 8-slot case adds rapidly to the max current density value in both the assembly and the fasteners. That is why this case is not recommended for use despite the fine contact pressure and penetration values.

ACKNOWLEDGEMENT

This research was encouraged and financially supported by “Quality 21-st Century” foundation.

REFERENCES

[1] R.S. Timsit, The Technology of High-Power Connections: A Review, *20th International Conference on Electrical Contacts*, Zurich, Switzerland, 2002, p. 526.

[2] A. Beredihin, M. Homiakov. *Electrical contact connections*. Energia, Moscow. 1980. (in Russian).

[3] R. Tzeneva, P. Dineff and Y. Slavtchev, Bolted Busbar Connections, XIV-th International Symposium on Electrical Apparatus and Technologies SIELA 2005, 2 – 4 June 2005, Proceedings of Papers Volume I, pp.207 – 211, Plovdiv, Bulgaria

.