Controlled by Optoelements Oscillators

Tsanko V. Karadzhov[1]

Abstract – **The controlled oscillators have usually electrical control input. The disadvantage of this oscillator type is that there is no galvanic separation between the control signal and the oscillator as well the control can be fulfilled only by the means of electrical stimulus. Thus electrical circuits are designed as they have both electrical and optical control input as there is galvanic separation between the oscillator and control stimuli in the same time. The circuits of controlled by optoelectronic elements oscillators for impulse and sine wave signal are developed. The frequency of these oscillators shifts in wide range as the illumination changes. In the current article two oscillators fulfilled with photo FETs and operational amplifiers are investigated. Photo FETs are connected in time setting circuit of the oscillators which allows to control them optically**

Keywords – **Oscillator, Optoelement, photo FETs.**

I. Controlled by Optoelements Impulse Oscillator Fulfilled with Photo JFETs and Operational Amplifier (OPAMP)

A. Work principle of the circuit – fig.1

The circuit represents symmetrical multivibrator implemented on OPAMP which is used as Schmidt trigger. The Schmidt trigger thresholds are determined as the resistance ratio between the drain and the source of the two photo JFETs. The computer modeling results are shown on fig. 2 and the real experimental results are shown on fig. 3

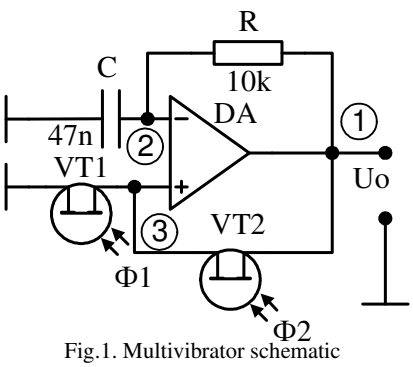

Fig.1. Multivibrator schematic

B. Circuit analysis

The Schmidt trigger threshold voltages are defined accordingly to following equations:

$$U_I = +\frac{R_{VT1}(\Phi 1)}{R_{VT1}(\Phi 1)+R_{VT2}(\Phi 2)}Uo = \beta . U_O \qquad (1)$$

$$U_{II} = -\frac{R_{VT1}(\Phi 1)}{R_{VT1}(\Phi 1)+R_{VT2}(\Phi 2)}Uo = \beta . U_O \qquad (2)$$

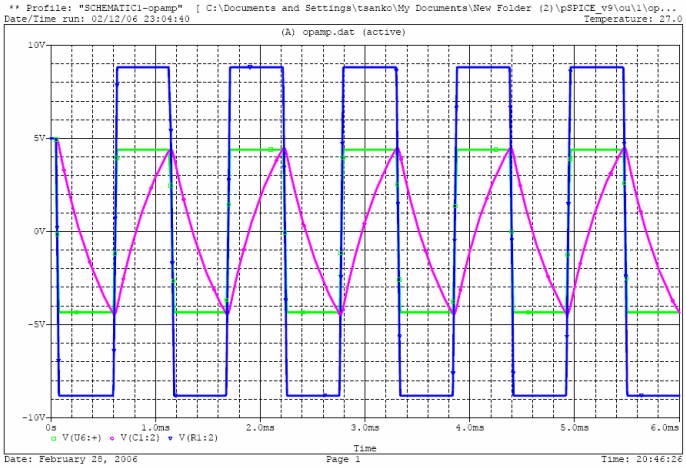

Fig. 2. Simulation results for impulse oscillator with photo FETs

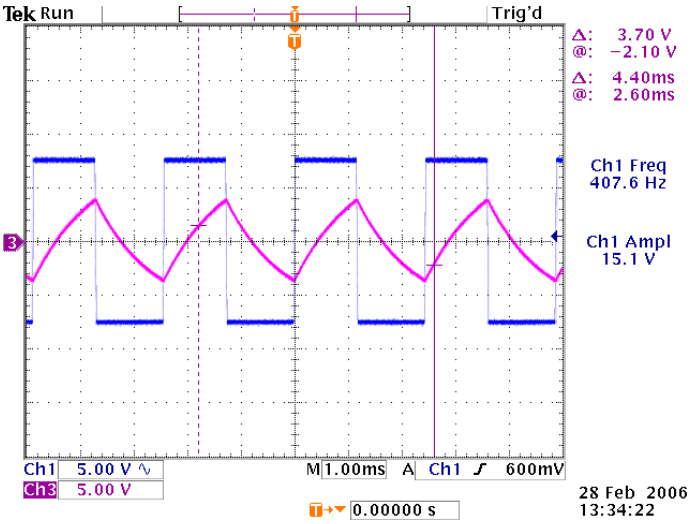

Fig. 3. Experimental results for impulse oscillator with photo FETs

The recharge cycle of capacitance C is described by the formula:

$$u_{C(t)} = U_{CC}(1-e^{\frac{t}{\tau}}), \text{ where}$$

$$U_{CC} = (1+\beta)U_O \text{ end } \tau = RC \qquad (3)$$

The capacitance voltage changes its values in the range from $-\beta U_O$ to $+\beta U_O$ – the variation interval is $2\beta U_O$.

Then for $2\beta U_O$ the following formula is obtained:

$$2\beta U_O = (1+\beta)U_O\left(1-e^{-\frac{T}{2RC}}\right) \qquad (4)$$

[1]Tsanko V. Karadzhov. Department of Electronics, Technical University – Gabrovo, Street "H. Dimiter" No. 4, 5300 Gabrovo, Bulgaria, phone: +359 66 801064, e-mail: karadjov_st@abv.bg

And therefore the period T can be presented as follows:

$$T = 2RC\ln\frac{1+\beta}{1-\beta} \tag{5}$$

$$T = 2RC\ln\left(1+2\frac{R_{VT1}(\Phi 1)}{R_{VT2}(\Phi 2)}\right) \tag{6}$$

When both of the photo JFETs are equally illuminated, i.e. $\Phi 1 = \Phi 2 = \Phi$, then $R_{VT1}(\Phi 1) = R_{VT2}(\Phi 2) = R_{VT}(\Phi)$.

In this case the repeat period of the generated impulses will be as follows:

$$T = 2RC\ln\left(1+2\frac{R_{VT}(\Phi)}{R_{VT}(\Phi)}\right) = 2RC\ln 3 = 2{,}2RC = \tag{7}$$

$$2{,}2.10.10^{3}.47.10^{-9} = 1{,}034.10^{-3} \approx 1ms$$

$$f = \frac{1}{T} = \frac{1}{2{,}2RC} = \frac{1}{1{,}034.10^{-3}} \approx 1kHz \tag{8}$$

The output frequency depends on the correlation between the degrees of illumination each of the photo FETs is exposed to. The experimental research determined that the threshold voltage varies in very wide range.

When the resistance ratio is $\frac{R_{VT1}}{R_{VT2}} = 100$, then the period is T_{max} = 4,98 ms.

When the resistance ratio is $\frac{R_{VT1}}{R_{VT2}} = 1$, i.e. the photo FETs are equally exposed to the light, then the period is T_{med} = 1 ms.

When the resistance ratio is $\frac{R_{VT1}}{R_{VT2}} = 0{,}1$, then the period is T_{min} = 171 µs.

The rate of changeable period is:

$$\frac{T_{max}}{T_{min}} = \frac{4{,}98.10^{-3}}{171.10^{-6}} = 29 \tag{9}$$

II. Controlled by Optoelements Sine Wave Oscillator

A. Work principle of the circuitt

The circuit of sine wave generator is shown on fig. 4. It represents RC oscillator with utmost transference coefficient and zero lag in the feedback circuit, which is realized with the Wien bridge circuit. In the Wien bridge a photo JFET is added to each of the serial RC group and parallel RC group.

With the classical Wien bridge the output voltage is brought back to the input at maximum efficiency for single certain frequency f_0 without the change in phase φ_β. The Wien bridge is connected to the non-inverse input of the OPAMP. The advantage of the circuit shown on fig. 4 is in the fact that generated frequency changes proportionally to the applied illumination as the only requirement for stable work of generator is both photo FETs to be approximately equally illuminated. The results from computer modeling and laboratory research are respectively shown on fig. 5 and fig. 6.

$\Phi 1 = \Phi 2$ and therefore $R_{VT1} = R_{VT2}$

This requirement is more easily implemented when in the circuit is used differential photoreceiver which consists of two photo FETs packed together.

The stable work of generator is additionally assured as the negative feedback represented by the resistors R_3 and R_4 is connected in the circuit.

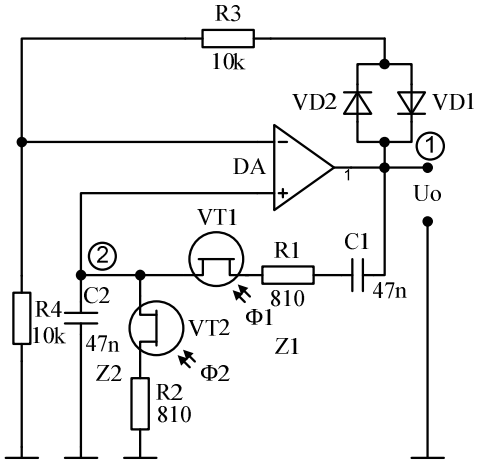

Fig. 4. Sine wave oscillator with photo FETs

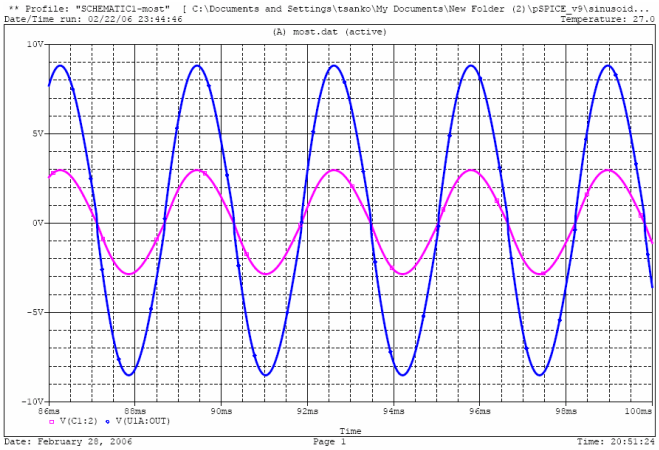

Fig. 5. Simulation results for sine wave oscillator with photo FETs

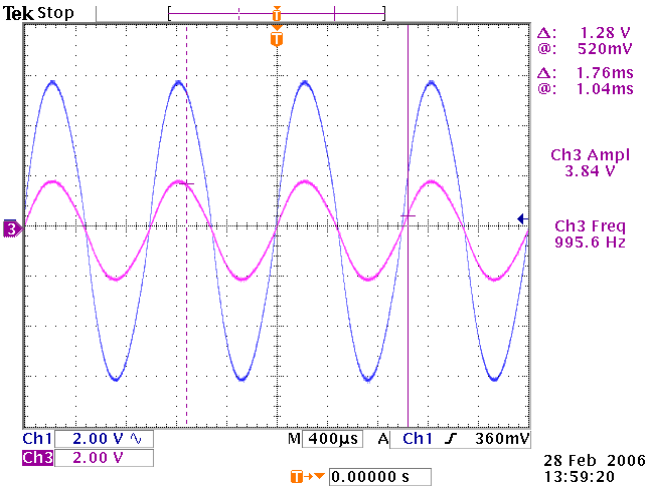

Fig. 6. Experimental results for sine wave oscillator with photo FETs

B. Circuit analysis

As the sinusoidal generator has two feedbacks in its circuit, the voltage U_β is equal to the difference between feedback voltages.

$$U_\beta = U_{\beta+} - U_{\beta-} \tag{10}$$

If assumption is made that the circuit works with ideal voltage amplifier ($R_I = \infty$ and $R_O = 0$), then the bridge will be balanced if the following requirement is fulfilled:

Z1.R4 = Z2.R3, where

$$Z1 = R1 + R_{VT1}(\Phi 1) + \frac{1}{j\omega C1},$$

$$Z2 = \frac{R2 + R_{VT2}(\Phi 2)}{1 + j\omega C2\left[R2 + R_{VT2}(\Phi 2)\right]} \tag{11}$$

Therefore the feedback coefficient β will be:

$$\beta = \frac{U_\beta}{U_O} = \frac{U_{\beta+}}{U_O} - \frac{U_{\beta-}}{U_O} = \frac{Z2}{Z1+Z2} - \frac{R4}{R3+R4} \tag{12}$$

After substitution the following equation is obtained:

$$\beta = \frac{1}{1 + \frac{R1 + R_{VT1}(\Phi 1)}{R2 + R_{VT2}(\Phi 2)} + \frac{C2}{C1} + j\left\{\omega C2\left[R1 + R_{VT1}(\Phi 1)\right] - \frac{1}{\omega C1\left[R2 + R_{VT2}(\Phi 2)\right]}\right\}} - \frac{R4}{R3+R4} \tag{13}$$

The minimal value of OPAMP amplify coefficient which guarantees the stable generations A_{min} is:

$$A_{\min} = \frac{1}{\beta} = \frac{1}{\frac{1}{1 + \frac{R1 + R_{VT1}(\Phi 1)}{R2 + R_{VT2}(\Phi 2)} + \frac{C2}{C1}} - \frac{R4}{R3+R4}} \tag{14}$$

The lag between output signal U_O and input signal U_I is zero.

The frequency of the sinusoidal generator is:

$$f = \frac{1}{2\pi\sqrt{\left[R1 + R_{VT1}(\Phi 1)\right]\left[R2 + R_{VT2}(\Phi 2)\right]C1C2}} \tag{15}$$

Since in the presented case $R_1 = R_2 = R$, $C_1 = C_2 = C$ and $R_{VT1}(\Phi 1) = R_{VT2}(\Phi 2) = R_{VT}(\Phi)$, thus the frequency will be as follows:

$$f = \frac{1}{2\pi\left[R + R_{VT}(\Phi)\right]C} \tag{16}$$

$$f = \frac{1}{2\pi.\left[810 + 10.10^3\right]47.10^{-9}} \approx 157Hz$$

The Wien bridge oscillator works more steadily when the negative feedback circuit has nonlinear elements in it. Thus the diodes VD_1 and VD_2 are connected in parallel with the resistor R_3.

III. Conclusion

The developed oscillators which are controlled by opto-elements can be applied as illumination-frequency converters, for illumination measurement or to measure difference between illuminations. Also proposed oscillators can be used in the frequency adjustment circuits which are controlled optically.

References

[1] Philips. Optoelectronic devices, 1986.
[2] Texas Instruments, Intelligent Opto Sensors, 1999.
[3] Toshiba. Optoelectronics, 1999.
[4] Zetex. Discrete Semiconductors. Quickreference Guide, 93.