Performance Analysis of a Positioning Electric Drive System

Mikho R. Mikhov[1]

Abstract – **The performance of a DC electric drive system with positioning control has been discussed in this paper. Detailed investigation in the respective transient and steady state regimes has been carried out through modeling and computer simulation. The static position error has been determined and the drive system accuracy has been analyzed. The developed models and the results obtained can be used in optimization and final tuning of such types of position drive systems.**

Keywords – **Electric drive system, Positioning control, Position accuracy analysis.**

I. INTRODUCTION

Position is one of the main controlled variables in electric drive systems. Movement control of the driven mechanisms is required in many applications, such as:

- machine tools;
- lifting machines;
- woodworking machines;
- manipulators and robots;
- antenna orientation systems;
- radio telescopes, etc.

In accordance with their operation principle, position control systems can be classified into two groups:

- systems with positioning control;
- systems with tracking control.

Positioning is a regime of control providing movement of the respective driven mechanism into a position with required accuracy [1], [4], [5].

This paper considers the performance of a positioning DC drive system with non-linear position controller. The respective transient and steady state regimes of operation have been investigated. The static position error has been determined. The drive system accuracy has been analyzed and discussed.

II. CONTROL LOOPS OPTIMIZATION

The electric drive system block diagram is shown in Fig. 1, where the following notations have been used: $G_{pc}(s)$ - transfer function of the position controller; $G_{sc}(s)$ - transfer function of the speed controller; $G_{cc}(s)$ - transfer function of the armature current controller; K_p and τ_p - gain and time-constant of the respective power converter; $R_{a\Sigma}$ - armature circuit resistance; $\tau_{a\Sigma}$ - armature circuit time-constant; K_m - motor coefficient; $\tau_{m\Sigma}$ - summary electromechanical time-constant; K_{cf} - gain of the armature current feedback; K_{sf} - gain of the speed feedback; K_{pf} - gain of the position feedback; V_p - position reference signal; V_s - speed reference signal; V_c - armature current reference signal; V_v - armature voltage reference signal; V_{pf} - position feedback signal; V_{sf} - speed feedback signal; V_{cf} - armature current feedback signal; V_a - armature voltage; I_a - armature current; T_l - load torque applied to the motor shaft; I_l - static armature current; ω - motor speed; θ - angular position.

The position controller output voltage is the respective speed reference signal, i.e.:

$$V_s = K_{pc}(V_p - V_{pf}) = K_{pc}K_{pf}(\theta_r - \theta) = K_{sf}\omega_r, \qquad (1)$$

where K_{pc} is the position controller coefficient.

The reference deceleration for the respective position difference of $\Delta\theta = \theta_r - \theta$ can be determined from Eq. (1) as follows:

$$\varepsilon_{br} = \frac{d\omega_r}{dt} = -\frac{K_{pc}K_{pf}}{K_{sf}}\omega. \qquad (2)$$

In order to achieve a fast positioning process, it is necessary to provide a deceleration with $\varepsilon_{br} = \varepsilon_{b\max} = \text{const}$ at $I_a = I_{a\max} = \text{const}$ [1].

In compliance with Eq. (2), for the position controller coefficient the following expression is obtained:

$$K_{pc} = \frac{K_{sf}\varepsilon_{b\max}}{K_{pf}\omega}. \qquad (3)$$

Given deceleration $\varepsilon_{b\max} = \text{const}$, the position difference $\Delta\theta$ and the motor speed ω get related through the following equation:

$$\Delta\theta = \frac{\omega^2}{2\varepsilon_{b\max}}, \qquad (4)$$

from where the speed can be expressed as:

$$\omega = \sqrt{2\varepsilon_{b\max}\Delta\theta}. \qquad (5)$$

[1]Mikho R. Mikhov is with the Faculty of Automatics,
Technical University of Sofia, 8 Kliment Ohridski Str., 1797 Sofia, Bulgaria,
E-mail: mikhov@tu-sofia.bg

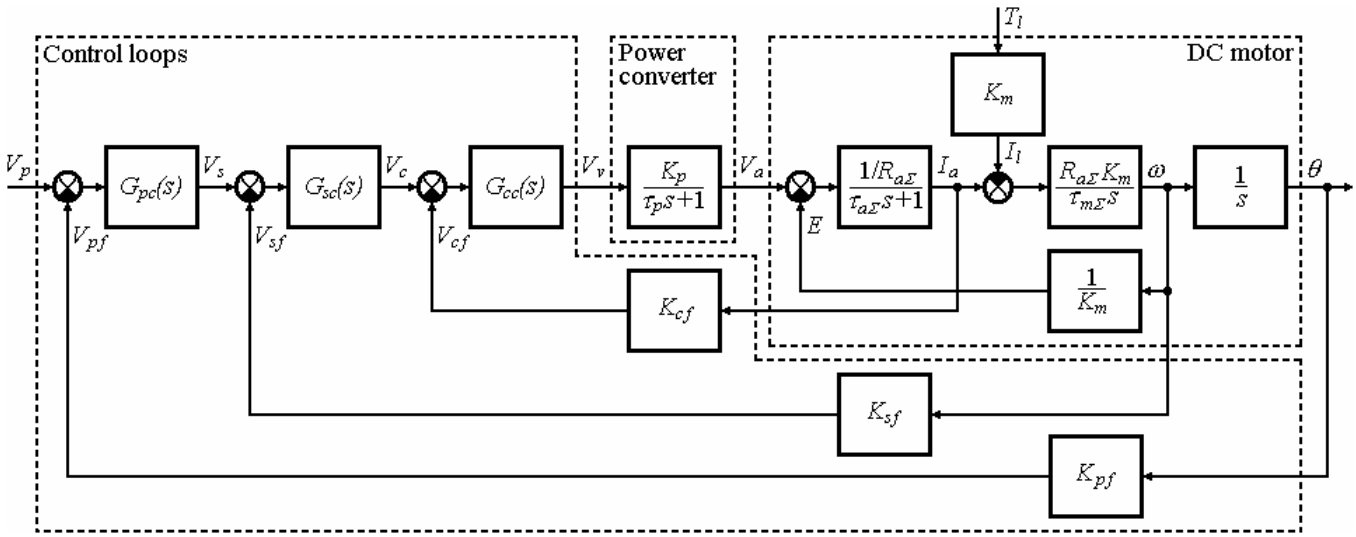

Fig. 1. Block diagram of the discussed electric drive system with positioning control

After substitution of Eq. (5) in Eq. (3), the position controller coefficient becomes:

$$K_{pc} = \frac{K_{sf}}{K_{pf}} \sqrt{\frac{\varepsilon_{b\max}}{2\Delta\theta}} . \tag{6}$$

In case of $\Delta\theta = \Delta\theta_{b\max}$ and $\omega = \omega_{\text{rat}}$, substituting Eq. (4) in Eq. (6), the following expression is obtained:

$$K_{pc\min} = \frac{K_{sf}\varepsilon_{b\max}}{K_{pf}\omega_{\text{rat}}} . \tag{7}$$

Using Eq. (6) from Eq. (1) the following nonlinear correlation $V_s = f(\Delta\theta)$ is received:

$$V_s = K_{sf}\sqrt{\frac{\varepsilon_{b\max}\Delta\theta}{2}} . \tag{8}$$

Reduction of $\Delta\theta$ to $\Delta\theta_s$ brings about an increase of K_{pc} up to a value equal to K_{pcs}, calculated according to the admissible overshoot:

$$K_{pcs} = \frac{K_{sf}}{K_{pf} a_p \tau_{\mu p}} , \tag{9}$$

where: $\tau_{\mu p}$ is the respective small time-constant of the position loop, not subject to compensation.

The positioning loop dynamic characteristics depend on the coefficient a_p value. For example, to provide for a transient process $\theta(t)$ without overshoot, the following condition should be fulfilled:

$$a_p \geq 4. \tag{10}$$

The block diagram of the synthesized position controller and its characteristic are shown in Fig. 2. The used notations are as follows: $\Delta\theta_{b\max}$ - maximum braking angle; $\Delta\theta_s$ - braking distance at which the controller coefficient value is switched over; $V_{s\max}$ - maximum speed reference signal. At $\Delta\theta \geq \Delta\theta_s$ the speed reference signal is $V_s = \text{const}$, while at $\Delta\theta < \Delta\theta_s$ the $V_s(\Delta\theta)$ characteristic coincides with the straight line 3.

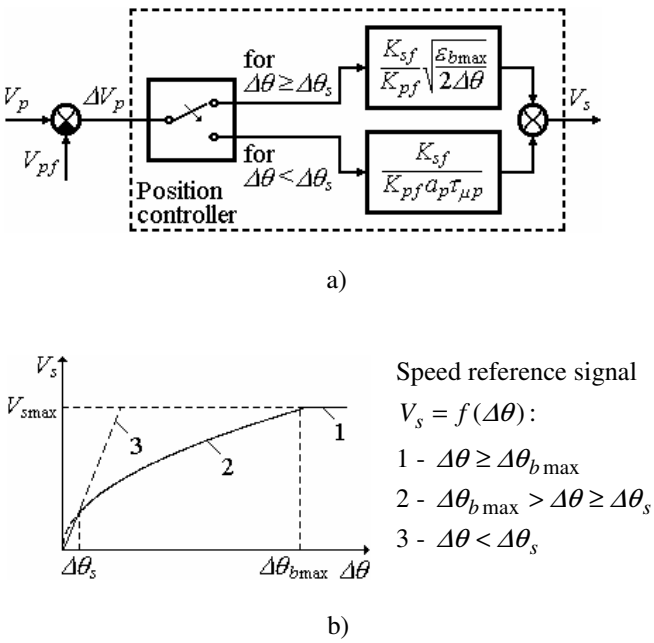

Fig. 2. Block diagram of the position controller and its characteristic

Using the MATLAB/SIMULINK software package a number of computer simulation models of electric drives with position control have been developed. A detailed study of the drive system under consideration has been carried out for the respective dynamic and static regimes.

III. Drive System Performance Analysis

Fig. 3 shows some simulation results illustrating the performance of the discussed electric drive system. Acceleration and deceleration are represented, as well as the operation in steady state regime. The reference position is 800 rad and the motor speed is limited to the rated value of $\omega_{\text{rat}} = 314\,\text{rad/s}$. The load torque acting upon the motor shaft is equal to the rated value of $T_{l\text{rat}}$. During the respective transient regimes the armature current is limited to the maximum admissible value of $I_{a\max} = 35.2\,\text{A}$, which provides good dynamics of the drive system.

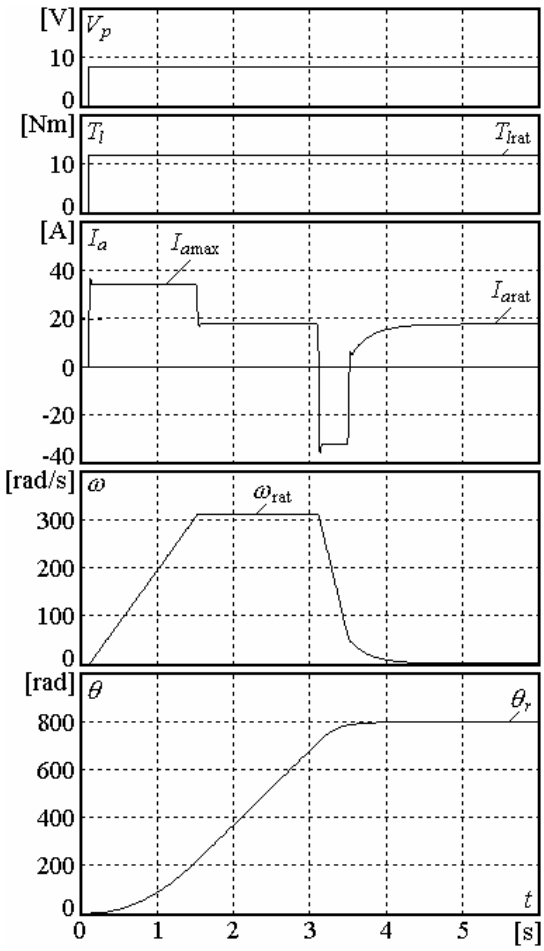

Fig. 3. Time-diagrams illustrating the drive system performance

Limitation of the static position error to the admissible value is a basic requirement in positioning systems as far as their regulation accuracy is concerned.

In order to determine the position error, the system block diagram has been transformed as shown in Fig. 4. This diagram has a control input of θ_r and a disturbance input of T_l. To make it convenient, the input and the controlled variable dimensions have been assumed to be equal, which means that the position feedback coefficient is $K_{pf} = 1$.

The optimized current control closed-loop is represented by the following transfer function:

$$M_c(s) = \frac{I_a(s)}{V_c(s)} = \frac{1/K_{cf}}{a_c\tau_{\mu c}^2 s^2 + a_c\tau_{\mu c}s + 1} \approx \frac{1/K_{cf}}{a_c\tau_{\mu c}s + 1}, \quad (11)$$

where: a_c is a coefficient influencing the current loop dynamic characteristics.

In the general case, the summary error of the drive system for the controlled variable θ can be determined using the following equation:

$$\Delta\theta_\Sigma(s) = \frac{\theta_r(s) + T_l(s)G_d(s)}{1 + G(s)}, \quad (12)$$

where: $G_d(s) = \theta(s)/-T_l(s)$,

$G(s) = \theta(s)/\theta_r(s)$.

The respective transfer function $G_d(s)$ can be represented as follows:

$$G_d(s) = \frac{K_{cf}K_m(a_c\tau_{\mu c}s + 1)}{G_{sc}(s)} M_s(s)\frac{1}{s}, \quad (13)$$

where: $G_{sc}(s)$ is the transfer function of the used speed controller;

$M_s(s)$ -the transfer function of the speed closed-loop.

After the respective tuning of the speed controller, the following expression is obtained for $M_s(s)$:

$$M_s(s) = \frac{\omega(s)}{V_s(s)} = \frac{1/K_{sf}}{a_s\tau_{\mu s}s(\tau_{\mu s}s + 1) + 1}. \quad (14)$$

Taking into account Eq. (14), the $G_d(s)$ transfer function is expressed as follows:

$$G_d(s) = \frac{K_{cf}K_m(a_c\tau_{\mu c}s + 1)}{\dfrac{K_{cf}\tau_{m\Sigma}}{K_m K_{sf} R_{a\Sigma} a_s a_c \tau_{\mu c}}} \left[\frac{1/K_{sf}}{a_s a_c \tau_{\mu c} s(a_c\tau_{\mu c}s + 1) + 1}\right]\frac{1}{s} =$$

$$= \frac{K_m^2 R_{a\Sigma} a_s a_c \tau_{\mu c}(a_c\tau_{\mu c}s + 1)}{[a_s a_c \tau_{\mu c} s(a_c\tau_{\mu c}s + 1) + 1]\tau_{m\Sigma}s}, \quad (15)$$

where: a_s is a coefficient influencing the dynamic characteristics of the speed control loop;

$\tau_{\mu c} = \tau_p$ is the small time-constant of the current loop, not subject to compensation.

In compliance with Fig. 4, using Eq. (9), the open-loop transfer function becomes as follows:

$$G(s) = \frac{K_{sf}}{a_p a_s a_c \tau_{\mu c}}\left[\frac{1/K_{sf}}{a_s a_c \tau_{\mu c} s(a_c\tau_{\mu c}s + 1) + 1}\right]\frac{1}{s} = \quad (16)$$

$$= \frac{1}{a_p a_s a_c \tau_{\mu c} s[a_s a_c \tau_{\mu c} s(a_c\tau_{\mu c}s + 1) + 1]}.$$

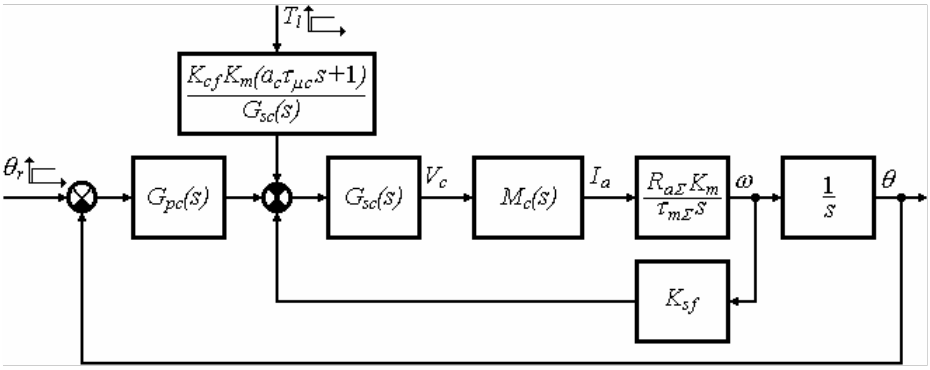

Fig. 4. Modified block diagram of the positioning control drive system

After substitution of Eqs. (15) and (16) in Eq. (12), the following expression is received for the summary error of the controlled variable:

$$\Delta\theta_\Sigma(s) = \frac{\theta_r(s)a_p a_s a_c \tau_{\mu c} s[a_s a_c \tau_{\mu c} s(a_c \tau_{\mu c} s+1)+1] + \dfrac{T_l(s)K_m^2 R_{a\Sigma} a_p a_s^2 a_c^2 \tau_{\mu c}^2 (a_c \tau_{\mu c} s+1)}{\tau_{m\Sigma}}}{a_p a_s a_c \tau_{\mu c} s[a_s a_c \tau_{\mu c} s(a_c \tau_{\mu c} s+1)+1]+1}. \quad (17)$$

The static error of the investigated drive system is obtained from Eq. (17) at $s = 0$:

$$\Delta\theta_s(s) = \frac{K_m^2 R_{a\Sigma} a_p a_s^2 a_c^2 \tau_{\mu c}^2}{\tau_{m\Sigma}} T_l(s). \quad (18)$$

As seen from the last equation, in this case the position error of the system depends on the load torque, applied to the motor shaft.

The drive system parameters as well as the calculated position error for one of the investigated versions have been represented on Table I.

IV. Conclusion

The main features of a positioning drive system with nonlinear position controller have been described and discussed. The rated parameters of the used separately excited DC motor are as follows: $P_{\text{rat}} = 3.4\,\text{kW}$, $V_{1\text{rat}} = 220\,\text{V}$, $I_{1\text{rat}} = 17.6\,\text{A}$, $\omega_{\text{rat}} = 314\,\text{rad/s}$.

Detailed investigation has been carried out through modeling and computer simulation for the respective transient and steady state regimes of operation. The static position error has been determined and the positioning drive system accuracy has been analyzed.

TABLE I
PARAMETERS AND STATIC ERROR OF THE DRIVE SYSTEM

Parameter	Dimension	Value
K_m	Nm/rad; rad/sV	1.484
$R_{a\Sigma}$	Ω	1.33
a_p	-	4
a_s	-	2
a_c	-	2
$\tau_{\mu c}$	s	0.004
$\tau_{m\Sigma}$	s	0.15
T_l	Nm	11.862
θ_r	rad	800
$\Delta\theta_s$	rad	0.1186
$\Delta\theta_s$	%	0.015

The developed simulation models and the results obtained can be used in optimization and final tuning of such types of position drive systems.

References

[1] V. I. Klyuchev, *Electric drive theory*, Moscow, Energoatomizdat, 1985 (in Russian).

[2] U. Keuchel, R. M. Stephan, *Microcomputer-based adaptive control applied to thyristor-driven DC motors*, London, Springer-Verlag, 1994.

[3] C. Ong, *Dynamic simulation of electric machinery,* New Jersey, Prentice Hall, 1998.

[4] I. Boldea, S. A. Nasar, *Electric drives*, Boca Raton, CRC Press, 1999.

[5] N. Mohan, *Electric drives – an integrative approach,* Minneapolis, MNPERE, 2003.

[6] M. R. Mikhov, "Modeling and investigation of a position control drive system", *Proceedings of the International Scientific Conference on Information, Communication and Energy Systems and Technologies (ICEST'04)*, pp. 461-464, Bitola, Macedonia, 2004.