Smart Capacitive-Resistive Sensors

Gerard C.M. Meijer, Xiujun Li, Zu-yao Chang and Blagoy P. Iliev

***Abstract* – In this paper the issues around electrical signal processing of capacitive sensors and capacitive-resistive sensors are discussed. It is shown that in case of simple capacitive elements with simple electronic circuits a very high performance can be obtained. However, because of physical problems, the capacitive sensor elements make often part of a complex electrical network, which can complicate the measurement tasks considerably. As case studies, the signal processing circuitry for humidity sensors, blood-impedance measurement and water-content measurement are discussed. It is shown the design of such circuits should be based upon a good understanding, characterising and modelling of the physical phenomena.**

***Keywords* – Impedance sensors, capacitive sensors, smart sensors, universal sensor interfaces.**

I. INTRODUCTION

Capacitive sensors capacitive-resistive sensors are similar to thermal sensors in that the transduction of the physical input signal to the output signal is performed in two steps: firstly, by transducing a physical quantity into a change of electric capacitance; then, by measuring and converting the capacitive signal into an electric output signal. For this reason, many thermal sensors can be replaced by capacitive ones and vice versa. The majority of capacitive sensors can be found in applications for the detection of mechanical quantities of moving objects such as position, speed, and acceleration, as well as force and pressure [1]. Another important application area is the measurement of liquid content and level and dielectric properties of materials. For the latter group of sensors the measurement is still represented by capacitive elements. However, these elements make part of a complex network, which can make their measurement rather challenging. For instance, in the water-content measurements (Section IV.A), such a measurement needs a sinusoidal excitation with frequencies of 20 MHz. At these frequencies, physical effects such as the skin effect and the proximity effect make it difficult to perform a volumetric measurement. So another approach is required.

In a clean dry environment, the accuracy and resolution of capacitive sensors can be very high [2](Hicks and Atherton, 2000) and the capacitive signals can be processed with simple circuits, using square-wave excitation signals. These circuits have attractive features such as low energy consumption and simple structure. However, in case of capacitive sensors, such as humidity sensors (Section III), the physical phenomena of, for instance, unclean or wetted electrodes can serious problems for the sensor-system performance.

This chapter deals with a systematic approach to the design of reliable, high-performance, and low-cost capacitive and capacitive-resistive sensor systems. The relations between measurands and capacitances are presented together with a discussion on how to optimize the electrode structures. The physical and electrical effects of shielding and guard electrodes will be pointed out. The parasitic effects of contamination, condensation and shunting conductances will be discussed together with possible solutions on how to reduce their influence.

[1]The authors are with the Department of Micorelectronics, Delft University of Technology, Mekelweg 4, 2628 CD Delft, The Netherlands, E-mail: g.c.m.meijer@tudelft.nl

II. BASIC PRINCIPLES OF CAPACITIVE SENSORS

For a simple flat-plate capacitor with two parallel-plate electrodes, the capacitance C_0 between the two electrodes with surface area S, which is separated by a distance d and a dielectric with dielectric permittivity ε, amounts to:

$$C_0 = \varepsilon \frac{S}{d} \cdot \tag{1}$$

In this equation, the effects of field bending and non-homogeneity of the dielectric are neglected.

When such a capacitor is used as a sensor to convert a non-electrical quantity into a change of a capacitive quantity, we can distinguish three ways of doing this:

- The non-electrical quantity changes the dielectric properties (Fig. 1 (a)). This method is applied to sensors that can measure, for instance, humidity, liquid level and material properties.
- The non-electrical quantity changes the electrode distance (Fig. 1(b)). This method is applied to sensors that can measure mechanical quantities such as force, pressure, acceleration and distances.
- The non-electrical quantity changes the electrode area or shields a part of the electric field (Fig. 1(c) and Fig. 1(d)). This method is applied to sensors that can measure, for instance, speed, position, movement and liquid level.

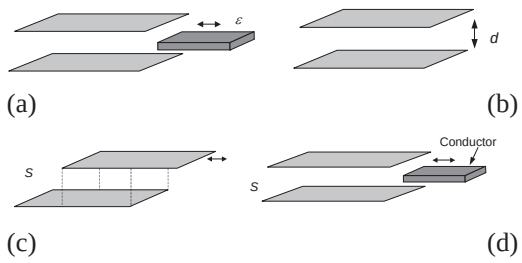

Fig. 1. Basic structure of capacitive sensors.

TABLE I. CAPACITIVE SENSORS, THEIR INPUT SIGNALS AND OPERATING PRINCIPLES

Name	Input signal	Change of
Angular encoder, Position sensor	Mechanical rotation and displacement	Effective electrode area
Force sensor Pressure sensor	Mechanical force or torque pressure	Electrode distance
Humidity sensor	Humidity	Dielectric constant
Accelerometer	Acceleration	Electrode distance
Liquid level gauge	Level of dielectric or conductive liquids	Dielectric constant or effective electrode area
Movement detection	Movement of objects or persons	Dielectric constant, effective electrode area or electrode distance
Property sensor	Material properties	Dielectric constant

Table I lists a number of examples in which the principles of capacitive sensors (as shown in Fig. 1) have been used. Some of these applications will be discussed below.

A. Humidity sensors

Humidity sensors are applied, for instance, in air conditioners, climate controllers, meteorological applications, food processing, and room-comfort control. A typical capacitive humidity sensor consists of a main (base) electrode (Fig. 2), a porous metal top electrode and an intermediate polymer dielectric layer which can absorb water molecules. Such absorption will result in an increase in the relative dielectric constant and thus also in the capacitance between the two connecting terminals.

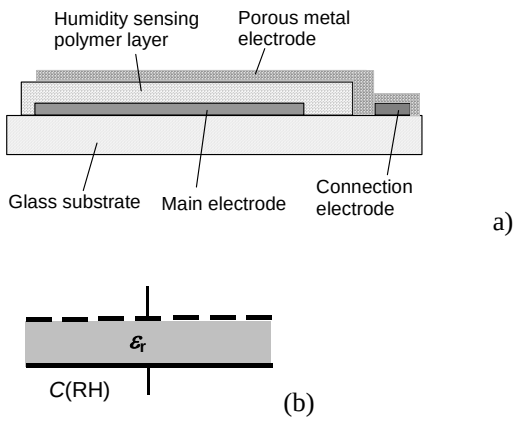

Fig .2. Capacitive humidity sensor

A capacitive humidity sensor can be made with, for instance, MEMS technology. Typical capacitance values of the sensor are in the range of 150 pF to 300 pF, with a 15% change of the capacitor values over the measurement range from about 5% RH to 95% RH.

One problem with capacitive humidity sensors is that their capacitance is shunted by a leakage resistance. When using (overly) simple electronics for the measurement of the capacitive impedance components, the leakage resistor can cause large measurement errors.

B. Liquid-level gauge

A capacitive liquid-level gauge can be used to measure the level of conductive and dielectric liquids. As an example, Fig. 3 shows the electrode structure of a liquid level gauge, which is composed of two vertical electrodes. One of them (the right-hand electrode) is segmented. After measuring all of the capacitances between the various segments with respect to the left-hand electrode, the level can be precisely measured in a two-step approach: with coarse signal processing the segment is found in the region in which the air-liquid interface exists; then, by using linear interpolation, the level position in this region is accurately calculated. In this way, the liquid level gauges can measure liquid levels in, for example, a range of 4 m with a resolution of 0.1 mm and an accuracy of 1.0 mm [3]. In such an application, to reduce the EMI effect, the guard and shielding electrodes (see the next section) should be carefully designed.

It is important to know whether or not the liquid is conductive or non-conductive; in the case of non-conductive liquids such as gasoline or oil, the presence of liquids with a

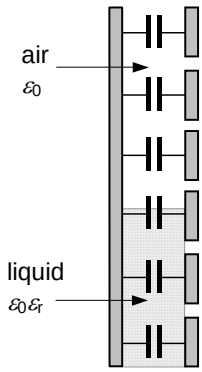

Fig. 3. Electrode structure of a liquid level gauge.

dielectric constant ε_r >1 will cause an increase in the capacitor values. In the case of conductive liquids such as water, the liquid will act as an electrode which is connected directly or indirectly to ground. In that case, the presence of (conductive) liquid will decrease the capacitance between the sensor electrodes. Moreover, the presence of conductive liquid will cause field-bending effects that can cause nonlinearity in the sensor characteristics. When all of these effects are carefully taken into account, capacitive level gauges can measure the levels of both conductive and non-conductive liquids.

C. The design of electrode configurations

A major drawback of capacitive sensors concerns their sensitivity to contamination and condensation, which can cause serious reliability problems. For instance, the measurement systems for capacitive sensors based on relaxation oscillators [4] are simple and offer a relatively high resolution. However, these capacitive measurement systems

cannot accurately measure the capacitance in the presence of shunting conductance.

Another drawback of capacitive sensors concerns the possible occurrence of electric-field-bending effects, which will cause inaccuracy in, for instance, capacitive displacement sensors. The use of guard electrodes is very important, as these reduce the influence of the electric-field-bending effect and also reduce the effect of external disturbing signals [1], [5] and [6]. However, in conventional capacitive sensors, the use of guard electrodes cannot eliminate the influence of electric-field-bending effects completely. Even when using well-designed guard electrodes, the electric-field-bending effect is still one of the major causes of residual nonlinearity of high-precision capacitive sensors.

In this section, the effects of EMI, electric-field bending, parasitic capacitors, and shunting conductance for the accuracy of capacitive sensors are discussed. Some solutions for reducing these effects are also presented.

C1. EMI effects

For easy understanding of the basic features of capacitive sensors, we use a simple structure with two parallel-plate electrodes (Fig(a)). The capacitance can be measured by applying an AC voltage V_m and measuring the resulting currents i_1 or i_2 (Fig. 4(a)). The signals to be measured are very small; capacitances are measured by calculating the charge displacement $\Delta Q = \Delta(CV)$. For instance, for a voltage swing equal to a supply voltage of 5 V and a desired resolution of 10 aF (= 10^{-17} F), the required resolution for charge displacement should be as high as 5×10^{-17} C. This small value equals the modulus of only 312 times the charge of a single electron. Therefore, reliable detection of such small capacitance changes requires integration over a number of these small charge displacements. Electro-Magnetic Interference (EMI) that is due to, for instance, an interfering voltage source V_{int}, can easily diminish the accuracy of the measured currents i_1 and i_2. Therefore, the sensitive structure requires electric shielding, as shown in Fig 4(b).

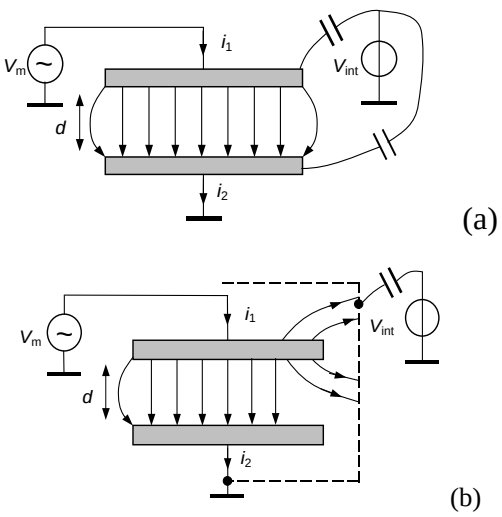

Fig. 4. To reduce the effect of the Interference source V_{int}, the capacitive structure is shielded.

C2. Electric-field-bending effect

In the electrode structure of Fig. 5(b), the electric field between the electrodes and the shielding directly affects the current i_1. Also, the current i_2 is slightly affected due to the electric-field-bending effect at the borders of the electrode. As a consequence, the measured position of the sensor electrodes is affected by that of the shield. Because of this problem, the current i_2 is a more accurate measurement for the capacitance between the electrodes than the current i_1. The effect of electric field-bending can be reduced by applying guard electrodes, as shown in Fig. 5. The bottom electrode is surrounded by grounded guard electrodes. Note that now the current i_2 is not influenced by the presence of the shielding, but the current i_1 still is. To enable the measurement of the current i_2 and to connect all of the electrodes properly, it is important to have access to all of the electrodes.

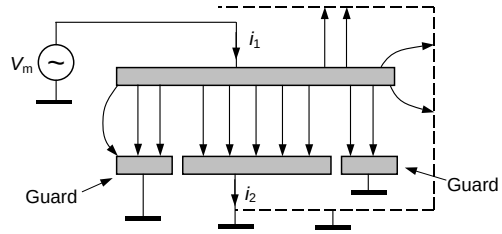

Fig. 5. Guard electrodes.

C3. Active-guard electrode

For practical reasons, sometimes only one of the two sensor electrodes is accessible while the other one is connected to ground. This is the case, for instance, when the bottom electrode is grounded in such a way that i_2 cannot be measured. In such a case, as an alternative, active guarding or shielding should be applied [7]. In this technique, a voltage follower (see Fig. 6) is applied to equalize the potential of the guard electrode with that of the active sensor electrode. By doing this, the voltage over the parasitic capacitance C_p equals zero so that no current will be drained through C_p. This technique can also be applied to eliminate the effects of parasitic resistors to the ground or to surrounding electrodes.

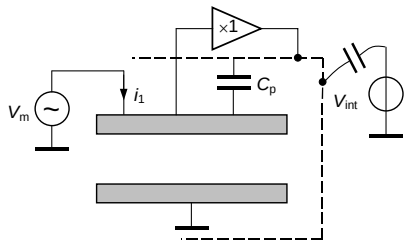

Fig. 6. Active-guard electrode.

C4. Floating electrodes

Floating electrodes are electrodes that are not connected to any well-known potential point in the system. The advantage of using a floating moving electrode (Fig. 1 (d)) is that, in a mechanical way, the measurement can be calculated without contact, which benefits the mechanical reliability. For

example, a capacitive encoder with a conductive rotor requires grounding of the sliding contact. This sliding contact can cause long-term mechanical reliability problems. To solve this problem, a floating-conductive or a dielectric rotor [8] can be used. With such a structure, the mechanical reliability is improved in exchange for a slight decrease in accuracy.

Another example of the use of floating electrodes is a capacitive personal detector [9], which is designed to detect the presence and movement of persons, animals, and objects. Although the idea is appealing and proof of this concept could be given for a laboratory environment, there is still a major reliability problem to be solved. This problem is due to the fact that electrodes that are not connected to a well-known potential, do have some parasitic, are not-well-controlled, and are coupled to the rest of the electrode structure. The influence of parasitics can heavily influence the measurement accuracy or even lead to a complete failure of the measurement.

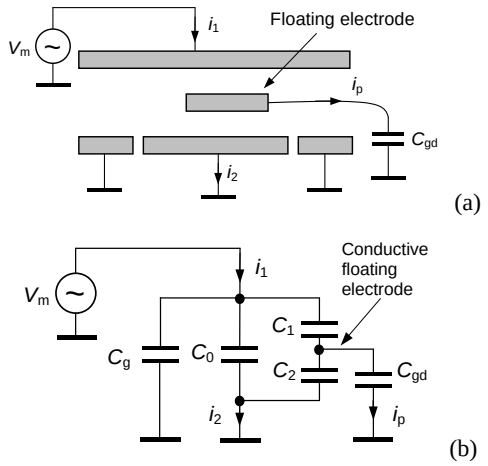

Fig. 7. (a) A floating electrode structure and (b) its electrical model.

In comparison to, for instance, magnetic sensors, a major drawback of capacitive sensors concerns their sensitivity to contamination and condensation. For a reliable measurement, the physical conditions should be well defined. However, in practical situations this is not always so easy to realize. Notorious examples of undefined conditions are those due to the occurrence of contamination and condensation. Contamination and condensation can form conductive layers that can be considered electrodes. Sometimes these undesired contamination electrodes are grounded and can attenuate the electric field within sensor capacitors. The opposite effect is also possible: when the undesired pollution electrodes enlarge the area of the transmitting electrodes, this will cause an increase in the sensor capacitance. It will be clear that the occurrence of undefined conductive layers is not acceptable. Therefore, the use of capacitive sensors is limited to those applications where a clean or dry environment can be guaranteed.

As an example, Fig. 7 shows a floating electrode structure and its electrical model in the case that the floating electrode is *conductive*. For the sensor structure of Fig. 7(a), the presence of the floating electrode can result in two opposite effects: depending on the value of the parasitic capacitance C_{gd}, the presence of the floating electrode can yield an *increase* or a *decrease* in the measured current i_2. Thus, it can be concluded that in order to obtain a reliable measurement, the capacitor C_{gd} from the floating electrode to its environment should be well defined.

In the case of floating dielectric electrodes, care should be taken to deal with problems caused by static charge. There are many examples of static charge at the dielectric surface of moving electrodes, which can cause an extreme amount of noise and related measurement inaccuracy and unreliability. Therefore, local static charge must be removed, for instance by applying a high-ohmic conductive layer on top of the dielectric electrode.

C5. Contamination and condensation

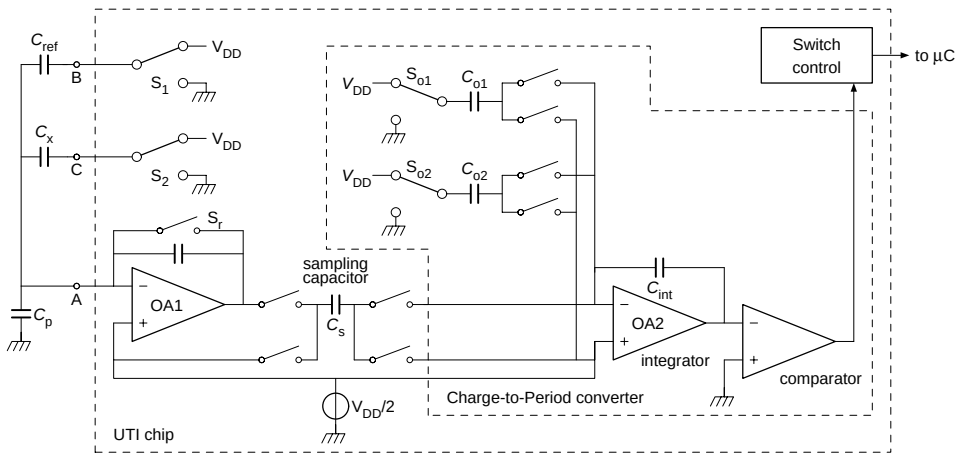

Fig. 8. Principle of the UTI system for capacitive-sensor

III. INTERFACE CIRCUITS

A main part of the interface is the electronic interface, which is called modifier. In [10] a very simple relaxation has been presented, which consist of a relaxation oscillator which generates a period-modulated output signal. The period of this signal can be easily be detected by a microcontroller. A similar circuit has been applied in a universal transducer interface (UTI) [11], [12], which has a number of capacitive modes to process the signals of capacitive sensors. Figure 8 shows the front-end circuit of the UTI that is used to determine the relative value of a sensor capacitor C_x with respect to a reference capacitor C_{ref}. These capacitors have one common electrode, thereby requiring three IC pins to connect the capacitors to the interface chip. In other modes, up to 4 capacitors and 1 reference capacitor can be connected, thereby requiring 6 pins. The modulator output controls the switches S_1 and S_2, so that a square-wave excitation voltage is generated controlled over the selected capacitor C_x or C_{ref}. This results in a square-wave output voltage for operational amplifier OA1, which is operated in its linear region. The amplitude of this output voltage is proportional to the value of the sensor capacitors C_x or C_{ref}. At the end of each half period, the capacitor C_s samples the magnitude of the square-wave output voltage of the front-end amplifier. After that, charge of C_s is dumped into the integrator capacitor C_{int}. This charge is removed by integrating the current I_{int}. As soon as the integrator output voltage exceeds the comparator reference voltage, the comparator switches into another state, starting the next step of the measurement. This relaxation process results in a periodic square-wave output signal of the comparator. The period length of the output signal is linearly related to the values of the sensor capacitors C_x or C_{ref}. A more detailed discussion on the operation of this circuit is presented in [11]

The sampling capacitor C_s and the charge-to-period converter (Fig. 8) belong to the UTI core, which is used in all modes. In this interface circuit a number of important measurement concepts have been implemented, such as:

- *The three-signal auto-calibration technique* [10], [11]. During the signal-measurement phase, the capacitor C_x is selected, during the reference phase, the capacitor C_{ref} is finally selected, and none of these two is selected during the offset phase. The three obtained signals are processed by the microcontroller in such a way that the scale and offset errors of the interface circuits are eliminated.
- *The two-port technique [10]*. Figure 9 (b) shows how this technique is used to measure a capacitor C_x, with a high immunity for the parasitic capacitances C_{p1} and C_{p2}.

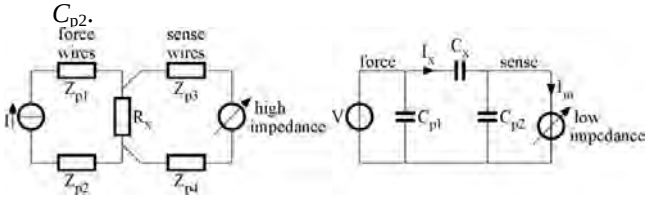

Fig. 9. The two-port technique.

- The transmitting electrode is driven from a low-ohmic voltage source and the receiving electrode is connected to virtual ground (terminal A of the interface chip). The application of this technique is important, because in sensor applications, the magnitude of the parasitic capacitances can exceed that of desired one with orders of magnitude.
- *An advanced chopper technique*, which makes the interface output signal rather insensitive to 1/*f* noise. This is achieved by modulating all relevant electrical signals at a frequency that is higher than the corner frequency of the 1/*f* noise. Because of this measure, it has been possible to implement the interface chip with low-cost CMOS technology, without problems caused by the strong 1/*f* noise of CMOS transistors.

The circuit of Fig. 8 has been designed for capacitive sensors that are free from leakage. In case of, for instance, humidity sensors a shunting leakage conductance 1 μS can cause a considerable measurement error. Therefore, Li and Meijer [13] designed a modified circuit (Fig. 10), in which the effect of a shunting conductance G_s is significantly reduced. This is achieved by minimizing the DC voltage over G_s and by discharging C_s as fast as possible.

In [13] it is reported that for a sensor capacitance of about 2 pF and shunting admittance of 1 μS causes an error of only 0.4%. Yet, in some application the shunting conductances can be much larger and can cause serious errors. To meet such a problem, another approach to measure capacitances will be required. Such an approach will be discussed in the next sections.

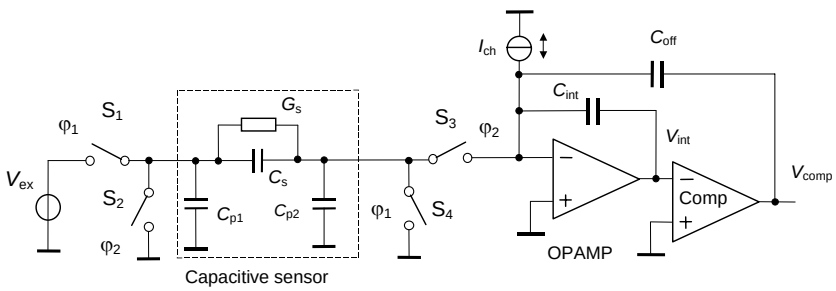

Fig. 10. The schematic diagram of the interface, with improved immunity for shunting conductance [13].

IV. Impedance sensors

When capacitive sensing elements are shunted by a relatively high parasitic conductance, other measurement techniques have to be applied. Firstly, the frequency of the excitation signal should be much higher than in the previous cases. Secondly, instead of square-wave signals, sinusoidal signals should be used. In that case, by measuring both the magnitude and the phase, it is possible to distinguish the capacitive impedance component from the resistive one. In this subsection, we will discuss this approach for two cases: a water-content sensor and a blood-impedance sensor.

A. Water content sensors

Nowadays, to grow crops in the agriculture and horticulture, instead of using natural soil, artificial soil is widely used. It prevents the spread of diseases and allows the natural soil to be able to recover. To optimize the crop-growing process the amount of water and nutrients have to be precise controlled.

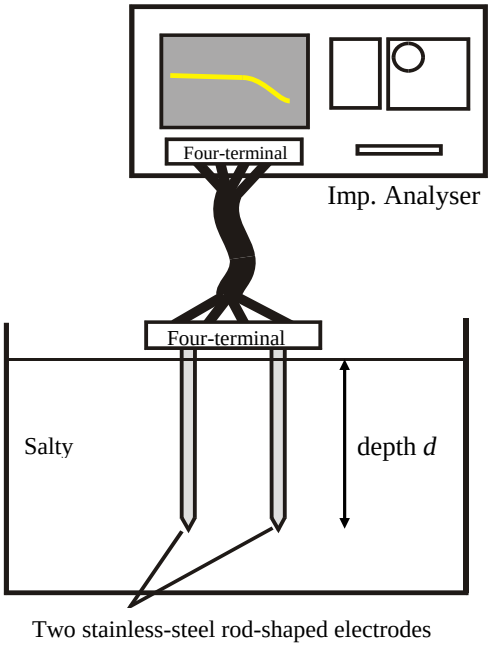

Fig. 11. Conventional-measurement setup. For easy testing of the set-up the artificial soil has been replaced by salty water/ethanol mixture [14]

Figure 11 shows a basic setup to measure the water content of artificial soil. Two electrodes are used to measure the impedance of soil [14]. For easy testing, in the setup of Fig. 11, the soil has been replaced by a mixture of salty water and ethanol. When the water content changes, both the capacitive and the resistive impedance components will change. However, the resistive component is also affected by many other physical effects, such as the salinity. Therefore, the capacitive component is used as a measure for water content. For a good measurement some important precautions have to be taken: Firstly, the electrodes have to be clean otherwise contaminations on the electrodes will obscure the measured results. In the experiments reported in [14], stainless-steel electrodes have been used, (being cheaper than gold or platinum). Secondly, to avoid the polarization effects the frequency of the excitation signals should be higher than at least 20 kHz. Thirdly, to measure the capacitive component in presence of a high shunting conductivity, the frequency of the excitation signals should be as high as is possible, but limited by the effects of a number of parasitic effects occurring at very high frequencies. In the experiments reported in [14], the excitation-signal frequency amounted to 20 MHz.

Figure 12 shows a simplified electrical model for the electrodes in a water/salt solution. It is a lumped model and the model for the polarization effects is left out, because at 20 MHz this effect can be neglected.

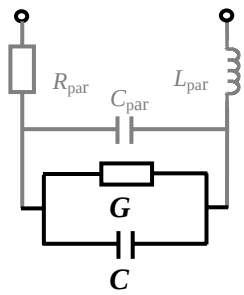

Fig. 12. Electrical model for a salt solution.

In this model the salty solution is modelled as a capacitance C in parallel with a conductance G. The element L_{par} represents the parasitic inductance of the metal rods and it varies with the length of the rods. The elements R_{par} and C_{par} represent respectively the parasitic resistance of the metal rods and the parasitic capacitance between the rods. Usually, the values of these elements are so small that they can be neglected. Unfortunately, the complexity of the model is increased by the occurrence of some physical effects, such as the skin effect and the proximity effect, which make that the values of the model elements are frequency dependent. Now, these effects will be considered in some more detail.

A. Skin and Proximity effects

When a current passes through a conductor, at high frequencies the main part of the current will flow along its surface. This well-known effect is called skin-effect. The depth δ of the skin where the amplitude has attenuated towards e^{-1} (37 %) equals:

$$\delta = \sqrt{\frac{2}{\omega\mu\sigma}} \ , \qquad (2)$$

where $\omega = 2\pi f$, σ is the conductivity of the conductor and μ is the permeability of the conductor. The skin effect will also occur in the salty water. Table II shows the calculated skin depth δ for a signal frequency $f = 20$ MHz and for different conductivities of the water/salt solutions. From Table II it can be concluded that with rods of 6 cm in length, for $\sigma \geq 9.38$ mS/cm the attenuation at the end of the rods will be too large. Another effect that occurs during measurement with the rods at high frequency is the so-called proximity effect. This effect has the same origin as the skin effect, but occurs in the plane perpendicular to the electrode axis. With the skin as well as with the proximity effect, at higher frequencies the current loops tend to minimize their area. This will cause a frequency dependency of all of the model elements G and L_{par} in the model of Fig. 12.

TABLE II THE SKIN DEPTH OF SALTY WATER

σ [mS/cm]	δ [cm]
0.509	49.9
2.63	21.9
9.38	11.6
20.5	7.9

To reduce the influence of the skin effect, a special probe with segmented electrodes has been designed (Fig. 13). The reduction of the electrode sizes to much less than the skin depth δ, results in a much more uniform current distribution along the length of the electrodes. Moreover, a significant reduction in the value of the parasitic inductance has been obtained. With an experimental setup it has been found that with this probe, even at high conductivities of the water/salt solution, the dielectric capacitance of the salty water at different depths can still be measured. It is possible to design probes with a series of such electrodes over the desired measurement length, so that over the whole vertical region along the probe, the specific impedance can be measured. It has been found [14] that with such a probe in salty water with conductivity up to 2 S/m, the capacitive impedance component can be measured correctly.

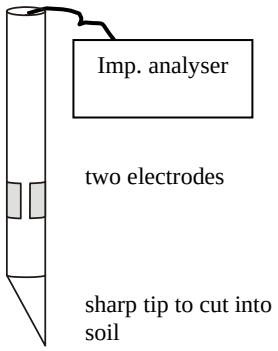

Fig. 13. Probe with segmented electrodes

B. A Blood-impedance characterization system

Blood impedance (Z_b) and particularly plasma resistance (R_p) and cell membrane capacitance (C_m) may be of a great importance for the medicine. They are related to hematocrit (H_t), which is the most valuable determinant of blood viscosity [15, 16]. By measuring blood viscosity various heart-related thrombotic events such as heart infarcts or strokes can be prevented. During animal experiments, a reduction of arterial thrombosis has been obtained by hemodilution therapy, which results in lower hematocrit. Fibrinogen, another determinant of blood viscosity, affects Z_b as well. In the view of the above-mentioned considerations our goal is to explore the diagnostic potential for measuring blood viscosity, hematocrit and fibrinogen levels and other blood parameters in-vitro and in-vivo by means of impedance measurement techniques. As compared to the previous case study, impedance measurement of blood is more complex, because of the more complex electrical behavior of the suspension, as will be discussed now.

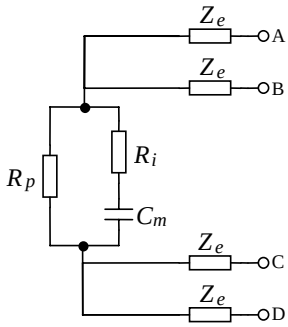

Fig. 14. Three-element model of blood including electrode polarization impedance Z_e.

Blood is a suspension of red cells, white cells, and platelets in plasma. A simplified three-element circuit model describes its properties (Fig. 14) [16, 17]. The concentration of red cells is called hematocrit and in this electrical structure is represented by R_p. R_i represents the cell interior resistance, as C_m is a measure for the cell membrane capacitance. The total complex impedance measured by a sensor includes the polarization effect of the electrodes (Z_e) too [17].

Though R_p is an accurate measure of H_t and therefore good indicator for the viscosity, it does not reflect fully viscosity because of the non-Newtonian characteristics of blood. The non-Newtonian behavior of blood means that it has higher viscosity at lower shear rate. Therefore, viscosity varies with the flow and shear rate eventually. To compensate for this, accurate measurement of C_m is needed. At a certain shear rate C_m is determined by the amount of cells (this is H_t), nevertheless approximately 10% of C_m is affected by the presence of plasma macromolecules between the cells. Consequently, R_p is considered to be measure for H_t and the combination of R_p and C_m is to be used to determine viscosity.

Fig. 15. HemoCard Vision measurement system.

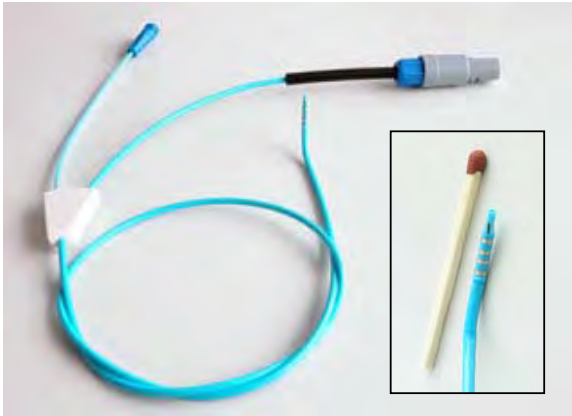

Fig. 16. Catheter for in-vivo characterization of blood in the right atrium.

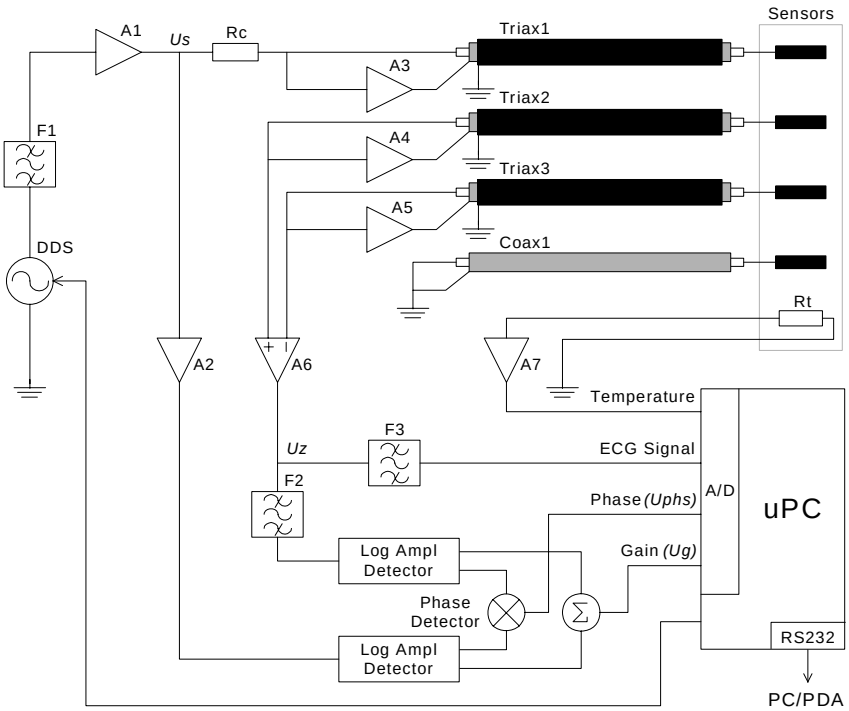

Fig. 17. Block diagram of the HCV interface electronics.

B1. Measurement system

A dedicated impedance-measurement system was designed to perform the characterization of blood. It works with sinusoidal signal in the frequency range from 20 kHz to 1.2 MHz and applies 10 uA current through the sensor. Figure 15 shows the measurement system named HemoCard Vision© (HCV). Its specially developed catheter can be seen in Fig. 16. It has four-electrode setup and a thermistor located at the distal end, near the tip. With the existing three lumens for administering of infusion solutions and/or measuring atrial pressure it enables all characteristic features of a central venous catheter (CVC) alongside with the impedance and temperature measurement capabilities. Four stainless steel electrodes, 0.8 mm wide, positioned equidistantly 2 mm center-to-center, sense the impedance. The outer pair is the excitation one and the inner is the sense pair. The thermistor is placed in a lumen, next to the electrodes. UV resin fills the cavity around the thermistor for better thermal contact. Three triaxial cables, 0.49 mm in diameter, and one coaxial cable, 0.33 mm in diameter, connect the electrodes to the interface electronics.

Regarding the equivalent electrical model of blood (Fig. 14), we set the following ranges for the HCV interface electronics: 20 Ω to 70 Ω for R_p and 0.2 nF to 2 nF for C_m. The applied current is limited by electromagnetic compatibility regulations to 10 uA. No DC current is allowed.

Figure 17 shows the block diagram of the interface electronics. It is battery-powered device using 3.7 V Li-Ion cell. Internal memory collects the measured data, which on later stage is transferred to a PDA or PC for further

processing. The RS232 connection is optically decoupled for safety reasons.

An excitation signal is generated by a direct digital synthesizer (DDS). Five discrete frequencies, 20 kHz, 200 kHz, 400 kHz, 600 kHz, and 1.2 MHz, are applied consecutively in the time. The excitation signal is filtered by F1, buffered by A1 and applied to the "high-potential" excitation electrode via clamp resistor R_c. The "low-potential" excitation electrode is connected to ground via decoupling capacitor (not shown in Fig. 17). Stray capacitance of 75 pF can be measured with each of the cables that connect the sensors to the electronics. Therefore, active guarding is applied in order to avoid phase and gain errors (A3, A4, A5). Additionally, third, grounded shield prevents emission or penetration of undesired signals.

High input-impedance differential amplifier (A6) senses the voltage, U_z, between the measurement electrodes. This signal is rather complex due to the presence of ECG component. The tip of the catheter is located inside the right atrium, between the sinoatrial node (SAN) and the atrioventricular node (AVN). Consequently, the measured signal is a mixture of weak impedance and strong ECG signals. The ECG component covers the frequency range from 0.5 Hz to 250 Hz, while the lowest impedance-signal frequency is 20 kHz. Two band-pass filters F2 and F3 ensure proper separation of the ECG and impedance signals.

Already filtered, the impedance signal is then compared with the source signal U_s by a phase gain analyzer and Z_b is calculated accordingly [20, 21].

With this setup a number of tests have been performed on swine and sheep [22]. These animals are known to have cardiovascular system similar to this of human, therefore these are used regularly during in-vivo experiments. During these tests R_p, C_m and ECG have been measured. These tests have proved that it is feasible to perform the described tests. It is shown, that prevention of growth of biolayers needs special care. Human trials will be performed in the near future.

V. Conclusion

This paper shows that capacitive sensors and capacitive-resistive sensors have to be designed as an overall system in its physical environment. A study of the physical environment should result in a characterization and modeling of the sensing elements and their parasitics. All of these elements and their mutual magnitudes should be taken into account when designing the interface system. For simple capacitive elements a very high accuracy (16 bits for a full range of 2 pF) can be obtained with simple interface circuits. To achieve such accuracy, powerful measurement techniques, such as autocalibration, chopping and two-port techniques should be applied. For easy use and rapid prototyping, it is convenient to use universal transducer interfaces, in which the subscribed measurement techniques have been implemented in the hardware of CMOS chips.

In case, that the sensor capacitances are shunted by a large parasitic conductance, the more complex impedance analyzers will be required. For this, two case studies have been presented. A first case study concerns a water-content sensor system, in which the capacitive impedance component represents the water content of artificial soil. For proper measurement a signal frequency of about 20 MHz is required. It has been shown that reduction of skin and proximity effects make it necessary to use special impedance probes. When using such probes water-content can be measured for water with conductivity up to 2 S/m.

As a second case-study a characterization system for blood impedance has been presented. It is shown that for electrical characterization of suspensions, such as blood, requires an even more complex measurement approach, using a range of signal frequencies. With the described impedance measurement technique it is possible to implement in-vivo monitoring of blood viscosity

References

[1] Baxter, L.K., "Capacitive Sensors: Design and Applications", IEEE press, NJ, 1997.

[2] Hicks, T.R. and Atherton P.D. "The nanopositioning book", Penton Press, UK, 2000.

[3] Toth, F.N., "A design methodology for low-cost, high-performance capacitive sensors", PhD. Thesis, Delft University of Technology, 1997.

[4] Toth, F.N., Meijer, G.C.M., "A low-cost smart capacitive position sensor", IEEE Transactions on Instrumentation and Measurement, vol. 41: 1041-1044, 1992.

[5] De Jong, G.W., "Smart capacitive sensor (physical, geometrical and electronic aspects)", Ph.D. Thesis, Electronics Research Lab., Delft Univ. of Technology, 1994.

[6] Heerens, W.Chr., "Multi-terminal capacitor sensors", Journal of Physics E: Sci. Instrum., vol. 15: 137-141, 1982.

[7] Huang, S.M., Beck, M.S., Green, R.G., Stott, A.L. "Electronic transducers for industrial measurement of low value capacitances", J. Phys. E: Sci. Instrum., vol. 21: 242-250, 1988.

[8] Gasulla, M., Li, X., Meijer, G.C.M., Van der Ham, L., Spronck, J.W., "A contactless capacitive angular-position sensor", IEEE Sensors Journal, vol. 3: 607-614, 2003.

[9] Toth, F.N., Meijer, G.C.M., Zapico, J.A., "A low-cost capacitive personnel detector with fuzzy-logic position estimation", Proceedings IMTC'96, Brussels: 1270-1274. 1996.

[10] Meijer, G.C.M., Van Drecht, J., De Jong, P.C., Neuteboom, H., "New concepts for smart signal processors and their application to PSD displacement transducers", Sensors and Actuators, vol. A35: 23-30, 1992.

[11] Van der Goes, F.M.L., Meijer, G.C.M., "A universal transducer interface for capacitive and resistive sensor elements", Analog Integrated Circuits and Signal Processing, vol.14, no.3: 249-260, 1997.

[12] Smartec, www.smartec.nl, May 2007.

[13] Li, X., Meijer, G.C.M., "An accurate interface for capacitive sensors", IEEE Transactions on Instrumentation and Measurement vol. 51, no. 5: 935-939, 2002.

[14] Chang, Z., Iliev, B.P., De Groot, F., Meijer G.C.M., "Extending the limits of a capacitive soil-water-content measurement", Proc. IMTC'05, Atlanta, 2005.

[15] G.A.M. Pop, W.J. Hop, et al., "Blood electrical impedance closely matches whole blood viscosity as parameter of hemorheology and inflammation", Applied Rheology, Vol 13, Issue 6.

[16] T. X. Zhao, B. Jacobson, Quantitative correlations among fibrinogen concentration, sedimentation rate and electrical impedance of blood, Medical & Biological Engineering & Computing, May 1997.

[17] L. A. Geddes, L. E. Baker, Principles in applied biomedical instrumentation, A Wiley-interscience publication 1989.

[18] H. P. Schwan, Electrode polarization impedance and measurements in biological materials. The more school of electrical engineering, Electromedical division, University of Pennsylvania, Philadelphia, 1988, Pennsylvania.

[19] Hugo Fricke and Sterne Morse, The electric resistance and capacity of blood for frequencies between 800 and 4½ million cycles, The Journal of General Physiology, Vol 9, 153-167, 1925.

[20] Blagoy P. Iliev and Gerard C. M. Meijer, An impedance-measurements system for electrical characterization of rockwool substrates**,** Sicon/04 - Sensors for Industry Conference, New Orleans, Louisiana, USA, 27-29 January, 2004.

[21] Tian-xian Zhao, Bertil Jacobson and Tommy Ribbe, Triple-frequency method for measuring blood impedance. Physiol. Meas., Vol. 14, 145-156, 1993.

[22] Iliev, B.P., Pop, G.A.M., and G.C.M., "In-vivo blood characterization system", Proc. IMTC'05, Atlanta, 2005.