Analysis of the Class E Amplifier with Load Variation

Iliya V. Nedelchev[1] and Iliya N. Nemigenchev[2]

***Abstract* – The operation is presented for class E power amplifier with output impedance converter. The ZVS conditions are specified for achieving high efficiency via minimizing the switching losses. The results for 100W, 1.8MHz are presented. Plots for $R = f(R_L), X_S = f(R_L), P_0 = f(R_L)$ and waveforms from experimental work at different load resistance are presented. According to the results, a wide area of variation of the load in ZVS mode can be achieved.**

***Keywords* – Power Amplifier Class E, High efficiency, Zero-Voltage Switching (ZVS).**

I. INTRODUCTION

The popularity of Resonant Switching Power Amplifiers (RSPS) as high frequency power sources increased in the last years due their advantages - high efficiency , high operation frequency and low cost. RSPS major application fields are dc-dc converters, SMPS (Switching Mode Power Supply), electronic ballasts, induction heating and telecom. Nearly any application suffers from load limitations for a guarantied safe and effective operation. Complicated control loops and protection circuits are required allowing maintaining efficiency in wide range load deviation. Improved circuit of class E amplifier with impedance converter can be used instead.

II. ANALYSIS

A. Assumptions

Consider Fig1 the amplifier class E consists of frequency source, bidirectional switch (MOSFET and anti-parallel diode), DC inductor for a constant current, parallel capacitor, series resonant LC circuit and load. The switch current can be bidirectional, but the Drain voltage can be only positive.

The analysis is based on the main assumptions [1]:

-The transistor has been replaced with ideal switch - zero forward resistance and voltage drop, open circuit in nonconductive state, instant switching.

-Ideal components C_1, C_2, L, i.e., they are linear, lossless and do not have parasitic resonances. The shunt capacitance C_1 includes the transistor output capacitance, the winding capacitance of the DC inductor and wiring capacitance. The transistor output capacitance is independent of the Drain to Source voltage.

-The DC inductor is an ideal current source – I_{dc}

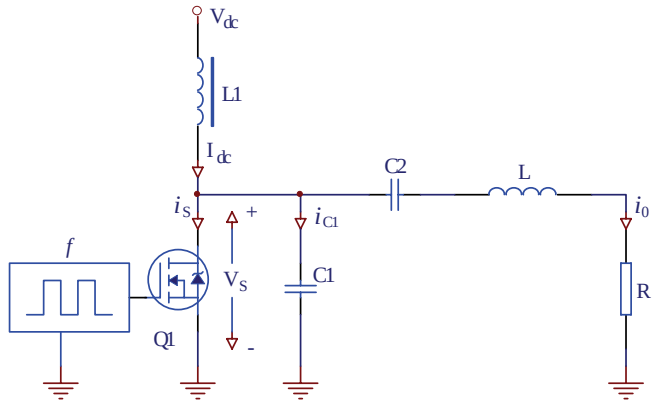

Fig. 1. Class E tuned power amplifier.

B. Parameters

The main amplifier parameters are calculated as follow. Series resonance frequency and Q - factor of L, C2, R, during transistor ON state are

$$\omega_{01} = \frac{1}{\sqrt{LC_2}}; \quad Q_1 = \frac{\omega_{01}L}{R} = \frac{1}{\omega_{01}C_2R} \qquad (1)$$

where $\omega_{01} = 2\pi f_{01}$.

Series resonance frequency and Q - factor of L, C1, C2, R, during transistorOFF state are

$$\omega_{02} = \frac{1}{\sqrt{\frac{LC_1C_2}{C_1+C_2}}}; \quad Q_2 = \frac{\omega_{02}L}{R} = \frac{C_1+C_2}{\omega_{02}C_1C_2R} \qquad (2)$$

where $\omega_{02} = 2\pi f_{02}$.

The operating frequency f differs from both resonant frequencies f_{01} and f_{02}. Therefore, it is convenient to introduce the following ratios of frequencies:

$$A_1 = \frac{f_{01}}{f}; \qquad A_2 = \frac{f_{02}}{f} \qquad (3)$$

From (1) to (3) the relationship (4) can be obtained

[1]Iliya V. Nedelchev is with the Technical University, Str. H. Dimitar 4, 5300 Gabrovo, Bulgaria, E-mail: ilned@tugab.bg

[2]Iliya N. Nemigenchev is with the Technical University, Str. H. Dimitar 4, 5300 Gabrovo, Bulgaria, E-mail: nemig@tugab.bg.

$$\frac{Q_1}{Q_2}=\frac{\omega_{01}}{\omega_{02}}=\frac{A_1}{A_2}=\sqrt{\frac{C_1}{C_1+C_2}} \tag{4}$$

The loaded Q-factor for the operating frequency can be expressed as

$$Q_L=\frac{\omega L}{R}=\frac{Q_1}{A_1}=\frac{Q_2}{A_2} \tag{5}$$

To maintain the efficiency the amplifier must be operated at 50% Duty Cycle and loaded Q-factor must be at least 5. Assuming above conditions the components can be calculated as [4]

$$R=0.5249\frac{V_{dc}}{P_0};\quad C_1=\frac{0.2067}{\omega R} \tag{6}$$

$$C_2=\frac{0.2269}{\omega R};\quad L=\frac{5.673R}{\omega} \tag{7}$$

In a case of load changes the impedance converter on Fig. 2 can be used. The parallel combination of X_P and R_L (Fig. 2b) can be converted into its series-equivalent circuit X_S – R (Fig. 2a). This conversion leads to the basic circuit of the class E amplifier. Using the equivalent two-terminal networks method, the relationships among the component of the two circuits at the operating frequency *f* are [5]

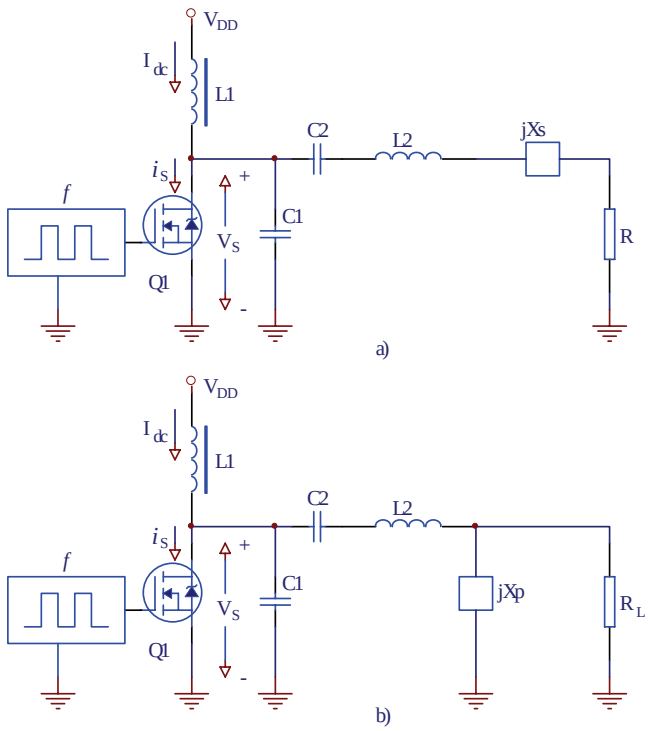

Fig. 2. Class E amplifier: a) Basic circuit. b) Circuit with impedance transforming network.

$$R=\frac{R_L}{1+\left(\frac{R_L}{X_p}\right)^2}=\frac{R_L}{1+q^2} \tag{8}$$

$$X_S=\frac{X_P}{1+\left(\frac{X_P}{R_L}\right)^2}=\frac{X_P}{1+\frac{1}{q^2}} \tag{9}$$

where $q=\frac{R_L}{X_P}$.

As the load resistance R_L from short to open circuit, the input resistance R first increases from zero to its maximum value $R_{\max}=X_P/2$ and then decreases to zero. In the same case, the equivalent series input reactance X_S changes from 0 to X_P . In the case of inductive impedance transformation $X_S=\omega L_S$ and $X_P=\omega L_P$, L_S changes from 0 to L_P, so the overall inductance in the series resonance circuit is $L=L_2+L_S$ and increases with R_L. At the same time the series resonance frequency $f_{01}=1/2\pi\sqrt{C_2(L_2+L_S)}$ decreases with R_L. The ratio $A_1=f_{01}/f$ also decreases with R_L for a fixed operating frequency *f*.

B. Design Equations

Input parameters for class E power amplifier design are V_{dc} - the supply voltage, *f* - operating frequency, P_0- output power required. High efficiency can be achieved via ZVS adding Q_1>5 and 50% duty cycle to the above requirements.

$$R_{\max}=0.5249\frac{V_{dc}^2}{P_0};\quad C_1=\frac{0.2067}{\omega R_{\max}} \tag{10}$$

$$C_2=\frac{0.2269}{\omega R_{\max}};\quad L=5.673\frac{R_{\max}}{\omega} \tag{11}$$

From (8),

$$q_{\min}=\sqrt{\frac{R_{L\min}}{R_{\max}}-1};\quad X_P=\frac{R_{L\min}}{q_{\min}} \tag{12}$$

can be defined, where $L_p=\frac{X_P}{\omega}$.

Using (9)

$$X_{S\min}=\frac{X_P}{1+\frac{1}{q_{\min}^2}};\quad L_{S\min}=\frac{X_{S\min}}{\omega} \tag{13}$$

which leads to

$$L_2 = L - L_{S\min} \quad . \tag{14}$$

To achieve minimal losses at any R_L, $q = 1$ is required as $R_{L\min}$. In this case the design point is for maximal value of the input resistance R and optimal operation mode.

$$X_P = R_{L\min} = 2R_{\max}\,; \quad X_{S\min} = \frac{X_P}{2} = R_{\max} \tag{15}$$

L_1 inductance affects the main amplifier parameters. This dependence can be ignored if the DC inductor has a value bigger then the minimal inductance $L_{1\min}$ [3]

$$L_{1\min} = \left(\frac{\pi^2}{4} + 1\right)\frac{R_{\max}}{f} = 3.5\frac{R_{\max}}{f}\,. \tag{16}$$

The power consumption and maximum DC current are

$$P_{DD} = \frac{P_0}{\eta}\,; \qquad I_{dc\max} = \frac{P_{dc}}{V_{dc}}\,. \tag{17}$$

The normalized pick transistor current and voltage are $I_{SM}/I_{dc} = 2.783$ and $V_{SM}/V_{dc} = 3.610$, respectively

$$I_{SM} = 2.783 I_{dc\max}\,,\; V_{SM} = 3.610 V_{DD} \tag{18}$$

The current amplitude in the serial resonant branch L_2–C_2 is

$$I_{0m} = \sqrt{\frac{2P_0}{R_{\max}}} \tag{19}$$

Giving a pick voltages across C_2 and L_2

$$V_{C2p} = X_{C2} I_{0m}\,; \qquad V_{L2p} = X_{L2} I_{om} \tag{20}$$

III. Experimental Rezults

Using the above methodology P_0 = 100W, f = 1.8 MHz, class E amplifier has been designed with V_{dc} = 30V power supply having efficiency η = 94% for optimal load R_{Lopt}= 8 Ω. The components value are L_1=20 μH, L_2 = 1.7 μH, L_3= 0.7 μH, C_1= 4.6 nF, C_2= 5 nF, V_{dc}= 30 V, D = 0.5, Q_1=5.

The impedance converter characteristics R and X_S versus R_L are plotted on Fig. 3. As mentioned before the input resistance R of the impedance converter changes from 0 to $R_{\max} = X_P/2$ when R_L changes from 0 to infinity. In the same time X_S changes from 0 to X_P. Defining $R_{opt} = R_{\max} = X_P/2$ equivalent to q = 1, $X_S = X_P/2$ ZVS can be achieved for any value of R_L.

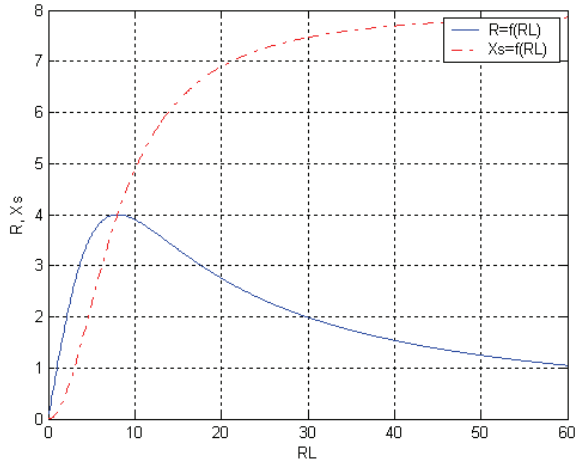

Fig. 3. Characteristics of impedance inverter

The measured characteristic of output power Po from load resistance R_L at constant frequency f = 1.8 MHz is plotted on Fig.4 where Po decreases with the increase of R_L.

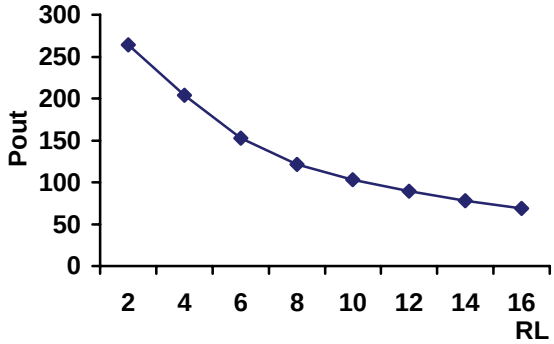

Fig. 4. Characteristics of P_0 versus R_L

Fig. 5 shows the waveforms of Drain and output voltage at constant operating frequency f = 1.8 MHz and various of the load resistance R_L for ± 50 % .

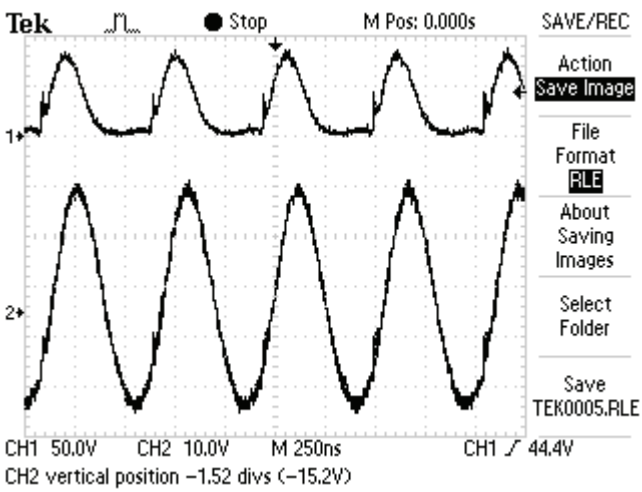

a)

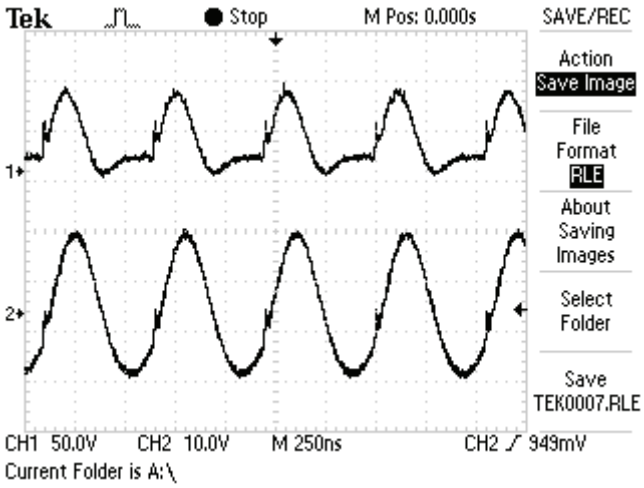

b)

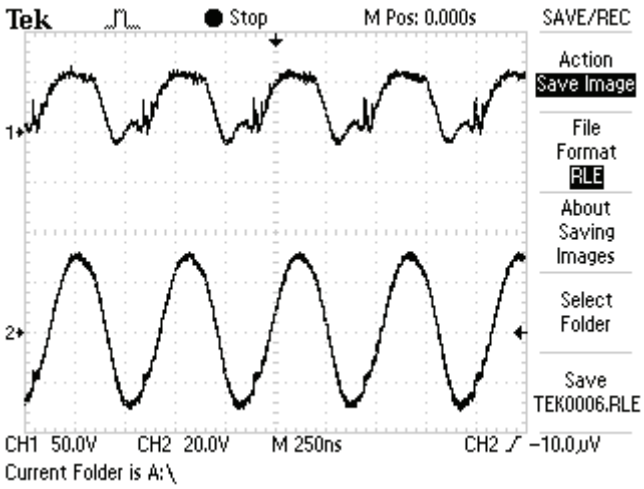

c)

Fig. 5. Voltage waveforms in the class E amplifier with an inductance: a) – 50 % R_{Lopt}, b) $R_L = R_{Lopt}$, c) + 50 % R_{Lopt}.

The oscillograms show that using the impedance converter ZVS mode can be achieved in class E amplifier for a wide deviation of the load resistance, low losses and high efficiency.

IV. Conclusion

The class E amplifier with integrated impedance converter can maintain ZVS for a wide load changes, fixed operating frequency, at low losses and high efficiency. Two cases of operation may be distinguished:

-If the amplifier is designed so that optimum operation for q=1, ZVS can be achieved for changing load resistance from zero to infinity.

-If the amplifier is designed so that operation occurs at q>1, ZVS can be achieved for the load resistance changing from a minimum load resistance R_{Lmin} to infinity.

The series equivalent inductance L_S is a function of load resistance R_L, it increases with R_L. Consequently, the resonant frequency $f_{01} = 1/\left[2\pi\sqrt{C_2(L_2 + L_s)}\right]$ automatically decreases with R_L and the ratio $A_1 = f_{01}/f$ also decreases with R_L for a fixed operating frequency *f*. Therefore, the circuit automatically adjusts its operating conditions to provide ZVS over a wide range of the load resistance R_L.

Additional features have to be implemented in order to protect the amplifier operating in a load short circuit conditions because of the high load power. The load open circuit condition is not dangerous for the amplifier class E with an inductive impedance converter.

References

[1] F. Raab, “Idealized operation of the Class E tuned power amplifier”, IEEE Transactions on Circuits and Systems, vol. cas-24, pp. 725-735, December 1977.

[2] H. Krauss, C. Bostian and F. Raab, *Solid State Radio Engineering*, New York, John Wiley & Sons, Inc., 1980.

[3] M. Kazimierczuk, “Collector Amplitude Modulation of the Class R Tuned Power Amplifier”, IEEE Transactions on Circuits and Systems, vol. cas-31, No. 6, pp.543-549, June1984.

[4] M. Kazimierczuk, K. Puczko, "Exact Analysis of Class E Tuned Power Amplifier at any Q and Switch Duty Cycle", IEEE Transactions on Circuits and Systems, vol. cas-34, No. 2, pp.149-159, February 1987.

[5] M. Kazimierczuk, X. T. Bui, “Class E Amplifier Operating from a Short Circuit to an Open Circuit”, Proceedings of the IEEE National Aerospace and Electronics Conference (NAECON’89), Dayton, OH, vol. 1, pp. 240-245, May 22-26 1989.

[6] N. Sokal, A. Sokal, “A new Class of high-efficiency tuned single-ended switching power amplifiers”, IEEE J. Solid State Circuits, vol. SC-10, pp. 168-176. June 1975

[7] S. Cripps, *RF Power Amplifier for Wireless Communications*, Artech House Boston London, 1999.