Performance Analysis of a Suboptimal Multiuser Detection Algorithm

Ilia Georgiev Iliev[1] and Marin Nedelchev[2]

***Abstract* – The paper presents a research of the possibilities of an algorithm for MUD, which uses a discrete successive search. The suboptimal methods for MUD in synchronous CDMA systems are prospective class in comparison to the optimal methods, because of the reduced number of calculations and computational complexity. A closed form formula is derived for the number of iteration of the algorithm for obtaining constant error probability. This allows rational use of the computation power of the machine and reduction of the number of the computations in MUD with successive search algorithm.**

***Keywords* – Synchronous CDMA, Multi User Detection, Suboptimal algorithm.**

I. INTRODUCTION

CDMA is an effective method for multiple access used in the mobile communications. In CDMA systems multiple users transmit signals in one and the same bandwidth simultaneously. To separate the received signal from a given user, it is required to observe some conditions. In the practice they are not fulfilled. Consequently, the signals from other users become interference – MUI (multi user interference).

As it is well known according to the information theory, the correlation receiver is optimal, when MUI is missing. If MUI exists, it may be considered as a noise with own probability and energy characteristics. Consequently the MUI existence will decrease the noise performance when using a common correlation receiver. For minimizing this drawback, Multi User Detection (MUD) is used. [1]. MUI carries useful information from the other users, that can be processed in a proper way to better the quality of the communication systems.

The optimal receiver for MUD is based on the Maximum Likelihood (ML) criterion [1]. The estimation of optimal decision is connected with verifying of all possible transmitted symbols' combinations. Therefore the great number of computations is the main drawback of ML MUD. The computations increase exponentially with the active users. This seriously complicates its application in the conventional mobile communication systems, nevertheless the high speed and huge computational power of the modern digital signal processors. There are many propositions of methods and algorithms for suboptimal receiving that decrease the necessary number of computations for detection In most cases, they are compromise between the computational complexity and the quality of the receiver [2,3].

There exists MUD with parametric optimization. In this case the Maximum A posteriori Probability (MAP) [1] criterion is used as a objective function for optimization. In the MUD case, the objective function is discrete, discontinuous, non differential, non-unimodal, therefore the most appropriate methods for optimization are the random search method, genetic algorithm, Evolutionary strategy etc. [4,5,6]. Their application in comparison to the optimal receiver with ML for MUD, decreases the computation number [6].

The paper presents a research of the possibilities of an algorithm for MUD, which uses a discrete successive search. The initial start point is derived after correlation single detection. The obtained results show that the increasing the number of the iterations leads reaches the theoretical curve for fully compensation the MUI or single detection. A closed form formula is derived for the number of iteration of the algorithm for obtaining constant error probability. This allows rational use of the computation power of the machine and reduction of the number of the computations in MUD with successive search algorithm.

II. OPTIMAL MUD IN SYNCHRONOUS CDMA SYSTEM

System model is shown on Fig.1. The signal processing is done in baseband.

Let the number of the user is *K*. They transmit synchronously direct spread spectrum (DSS) 2PSK modulated signals. The signal on the receiver input during bit interval T_b is:

$$r(t) = \sum_{k=1}^{K} \sqrt{E_k}\, d_k c_k(t) \alpha_k e^{j\theta_k} + n(t) \qquad (1).$$

r(t) is represented in a discrete in time matrix form as:

$$r(t) = \boldsymbol{cAEd} + n(t) \qquad (2),$$

where: $\boldsymbol{d} = [d_1, d_2, ..., d_K]^T$ is a vector-column, containing the value of the transmitted symbol with duration T_b from the k-th user. The symbols are bipolar NRZ coded $d_k \in \{-1, +1\}$;

[1]Ilia Georgiev Iliev – Assoc. Professor, PhD in Dept. of Radiotechnic in Faculty of Communications and Communication Technologies in TU –Sofia E-mail: igiliev@tu-sofia.bg

[2] Marin Veselinov Nedelchev -Assistant, PhD in Dept. of Radiotechnic in Faculty of Communications and Communication Technologies in TU –Sofia E-mail mnedelchev@tu-sofia.bg

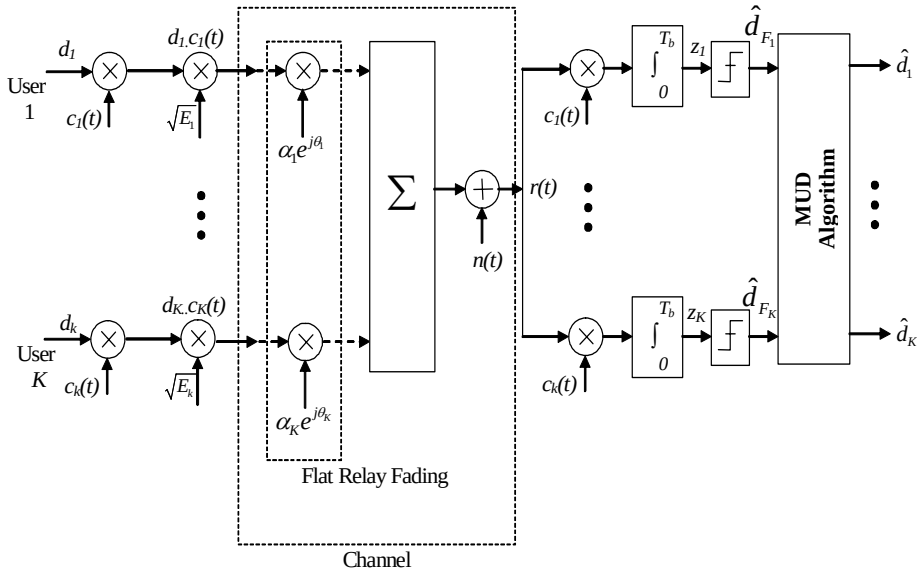

Fig.1 System model of MUD

$\boldsymbol{A} = diag[\alpha_1 e^{j\theta_1}, \alpha_2 e^{j\theta_2}, ..., \alpha_K e^{j\theta_K}]$ is a diagonal matrix and the elements in the main diagonal are the complex channel transmission coefficients of the corresponding user. The amplitudes are Relay distributed and the phases are uniformly distributed in the interval [0,2π). It is assumed that the channels for different users are statistically independent;

$\boldsymbol{E} = diag\left[\sqrt{E_1}, \sqrt{E_2}, ..., \sqrt{E_K}\right]$ is a diagonal matrix. $\sqrt{E_k}$ is the symbol energy of the k-th user;

$\boldsymbol{c} = [c_1(t), c_2(t), ..., c_K(t)]$ - is a matrix, each row of it consists of the elements of the spreading sequence for the corresponding use $c_k^{(n)} \in \{-1, +1\}$. The sequences length is N - $N = T_b / T_c$, T_c is the chip duration; *n(t)* is the realization of complex additive white Gaussian noise (AWGN) with independent real and imaginary components. Each of them has dispersion $\sigma^2 = No/2$ [W/Hz].

MUD is connected with parallel receiving of the symbols from *K* users. The receiver consists of *K* single correlation receivers-*K* receiving channels (Fig.1). Let there exists ideal synchronization and the complex channel transmission coefficients are determined $[\alpha_1 e^{j\theta_1}, \alpha_2 e^{j\theta_2}, ..., \alpha_K e^{j\theta_K}]$. The vector $\boldsymbol{z}$ is on the correlator output and it consists of the following elements:

$$\boldsymbol{z} = [z_1, z_2, ...z_K]^T = \boldsymbol{RAEd} + \boldsymbol{n} \qquad (3).$$

$\boldsymbol{R}$ is the cross-corelation *K*x*K* matrix, which coefficients are the normalized cross-correlation functions of the spreading sequences:

$$R_{ij} = \frac{1}{N}\int_0^{T_b} c_i(t) c_j(t) dt \qquad (4).$$

$\boldsymbol{n}$ is the AWGN after the correlator, introduced as a vector column $\boldsymbol{n} = [n_1, n_2, ..., n_K]^T$ with a covariance matrix equal to: $\boldsymbol{R}_n = 0.5 N_o \boldsymbol{R}$. The *k*-th element is:

$$n_k = \int_o^{T_b} n(t) c_k(t) dt .$$

A. Single detection

In the schematic shown on Fig.1, the decision is made in accordance with the ML criterion separately for each channel - single detection. The received symbols are further used for MUD.

There exists, by definition, a synchronization of the symbol transmitting from multiple active users. Represented in matrix form, the decision device output vector in the single detection case is:

$$\hat{\boldsymbol{d}}_F = [\hat{d}_{F_1}, \hat{d}_{F_2}, ..., \hat{d}_{F_K}] = sign\left\{\Re(\boldsymbol{A}^* \boldsymbol{z})\right\} \qquad (5).$$

The variable on the decision device input $\boldsymbol{z}$ depends on the current transmitted symbol, MUI and the AWGN. This allows determining the noise performance for single detection. For the k-th user and Gaussian approximation of the MUI distribution for flat Relay fading channel, the error probability is:

$$Pe_{k_{MUI}} = 0.5\left(1 - \sqrt{E_k / \left(N_o + \frac{1}{N}\sum_{i=2}^{K} E_i + E_k\right)}\right) \qquad (6).$$

Eq.6 considers the more difficult case of using of random instead of pseudorandom spreading sequences. The multiplier 1/N is connected to the dispersion of the cross-correlation functions of the random sequences.

When the power on the receiver input from all users is equal and using of random sequences, the error probability is:

$$Pe_{k_{MUI}} = 0.5\left(1 - 1/\sqrt{N_o + (K-1)/N + 1}\right) \quad (7).$$

If the signal-to-noise ratio (SNR) is much bigger than the signal-to-MUI ratio, therefore the lower bound of the error probability, when MUI exists from K users and single detection is:

$$Pe_{kfl} = 0.5\left(1 - 1/\sqrt{1 + (K-1)/N}\right) \quad (8).$$

B. Optimal MUD

Optimal MUD is obtained when MAP criterion is applied. It is searched for the maximum of the received signal correlation with all possible transmit signals. The logarithmic likelihood function is presented in matrix form [1]:

$$\Psi(\boldsymbol{d}) = 2\Re(\boldsymbol{d}^T \boldsymbol{E}\boldsymbol{A}^* \boldsymbol{z}) - \boldsymbol{d}^T \boldsymbol{E}\boldsymbol{A}\boldsymbol{R}\boldsymbol{A}^* \boldsymbol{E}\boldsymbol{d} \quad (9).$$

The symbolт $()^*$ means the complex conjugated value and $()^T$ – transpose matrix.

The decision of the transmitted symbols is:

$$\hat{\boldsymbol{d}} = \arg\left\{\max_{\boldsymbol{d}}\left[\Psi(\boldsymbol{d})\right]\right\} \quad (10).$$

The optimal algorithm for MUD leads to eliminating the MUI influence. The error probability for one bit for a given user is equal to the error probability in the case of correlation single detection:

$$Pe_{ko} = 0.5\left(1 - \sqrt{E_k / \left[\left(N_o + E_k\right)\right]}\right) \quad (11).$$

III. SUBOPTIMAL DETECTION WITH SUCCESSIVE SEARCH ALGORITHM POSSIBILITIES

A. Algorithm for successive search.

Finding the optimal decision for MUD is considered as optimization task, which objective function is multiparameter, discrete, non-unimodal – (9). One of the possible variants, proposed in [7] is to apply a successive search. The vector for optimization consists of the elements with the user symbols $\boldsymbol{d}$. The number of the computations in the algorithm decreases if the start point for optimization is the data from the correlation receivers' outputs. Based on this data, combined with the decision criterion (5), it is obtained a packet ot symbols- $\hat{\boldsymbol{d}}_F$. These criterions do not minimize the errors caused by MUI, just the contrary in the approximation of the error probability with (6), (7), (8), (11), the total interferences are considered as independent Gaussian random value from the noise. The decision criterion (10) at MUD compensates the influence of MUI, and the error probability depends only on the power of the AWGN.

If one bit in the packet is mistaken, it can be corrected using the decision criterion (10). It is necessary to make only (K+1) computations of the objective function (9) with vectors of the set M_d, that have Hamming distance with the vector $\hat{\boldsymbol{d}}_F$ equal to one:

$$M_d = \left\{d : H_d\left(\hat{\boldsymbol{d}}_F, \boldsymbol{d}\right) = 1\right\} \quad (12).$$

Then iteration of the algorithm is related to search in a vicinity of the point in the K-dimensional space with Hamming distance of one. This can be realized as each step of the optimization algorithm consecutively changes one element of the vector $\boldsymbol{d}$ (changes the bit) and evaluates the objective function. After this, it is picked up the bit, which maximizes (9). The decision criterion transforms in:

$$\hat{\boldsymbol{d}} = \arg\left\{\max_{\boldsymbol{d} \in \boldsymbol{M_d}}\left[\Psi(\boldsymbol{d})\right]\right\} \quad (13).$$

The search carries out errors so many times as are the errors number in one vector $\boldsymbol{d}$.

A. Parameters of the successive search algorithm.

The receiver output symbols are parallel or the received vector $\hat{\boldsymbol{d}}$ is a packet, consists of K symbols. Let the channels of the different users are independent and the requirements for the use of Eq.8 are fulfilled. The number of symbol errors m in a given packet is binomial distributed and the probability is given with:

$$P_K(m) = C_K^m (Pe_{kfl})^m (1 - Pe_{kfl})^{K-m} \quad (14).$$

Let's assume that the objective function (9) is decreasing for increasing of the Hamming distance against the optimal decision in (10). If the errors in the packet are more than one, the upper described procedure may be repeated as times as the number of errors is. Each iteration of the successive search reduces only one error in the packet. In this reducing of the error probability, the lower bound of the error probability per bit, for a given user may be obtained with the following equation:

$$P_e = \sum_{m=L+1}^{K} \frac{m-L}{K} C_K^m (P_{ekfl})^m (1 - P_{ekfl})^{K-m} \quad (15),$$

where L is the number of the corrected errors. In fact L defines the minimal number of iterations for successive search. Fig.2 shows the dependence of the error probability against the number of active users (the size of one packet) for a constant number of corrected errors (number of iterations in the criterion (13)). The dashed line shows the lower bound of the error probability in the case of single correlation detection- Eq.8. It is clearly seen that the increase of the number of iterations, decreases the error probability, due to compensation of MUI. Eq. (14) shows that the multiple errors are less probable.

The obtained dependence (15) and Fig.2 make possible for a given error probability and number of active users to compute the minimal number of iterations of the algorithm L. In this way, one may adaptively to change the number of calculations depending on the mobile network loading. It is clear that in the successive search algorithm, the number of calculations of the objective function is significantly reduced.

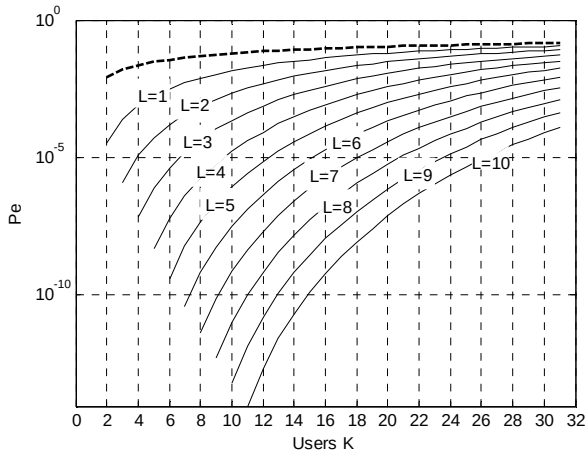

Fig.2

If an optimal algorithm is applied, the number of the computations J of the objective function are obtained by $J= 2^K$. If L is used for termination criterion of the search, therefore the number of the computations depends on the number of the iterations and the active users. Furthermore, L may be used for a limit for termination of the search.

IV. SIMULATION RESULTS

The algorithm is simulated in MATLAB. The spectrum is spread with random sequence for each user with length N=31. The channel is AWGN with slow Relay fading.

Fig.3 and fig.4 show the measured error probability in dependence of the mean value of Eb/No for K=10,20 and different number L=1,2,3,4. The results show that the increasing the number of the iterations leads to reach the theoretical curve for fully compensation the MUI or single detection with Eq.11. It is clearly seen from Fig.3 that for L=4 , the lowest error probability is $Pe=10^{-5}$. In the rest cases for L Pe is bounded below and the value coincides with the value obtained by Eq.15.

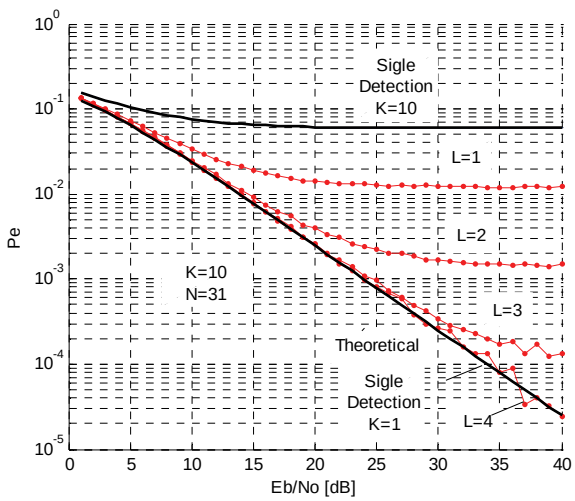

Fig.3 Error probability versus E_b/N_0 for active users K=10

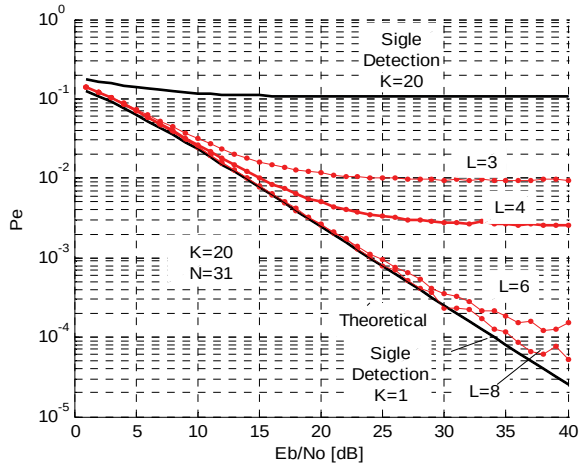

Fig.4 Error probability versus E_b/N_0 for active users K=20

V. CONCLUSION

The suboptimal methods for MUD in synchronous CDMA systems are prospective class in comparison to the optimal methods, because of the reduced number of calculations and computational complexity. The results presented in this paper allow changing adaptively the number of the iterations, respectively the number of the calculations of the MUD algorithm in dependence of the number of active users and a constant error probability. Additionally the number of the calculations is reduced because the initial start point for optimization is chosen after single detection.

The obtained results show that the increasing the number of the iterations leads reaches the theoretical curve for fully compensation the MUI or single detection.

REFERENCES

[1] S. Verdú, *Multiuser Detection*. New York: Cambridge Univ. Press,1998.

[2] R. Lupas and S. Verd´u, Linear multiuser detectors for synchronous code-division multiple-access channels, *IEEE Trans. Inform. Theory*, vol. 35, pp. 123-136, Jan. 1989.

[3] Z. Xie, R. Short, C. Rushforth, A family of suboptimum detectors for coherent multiuser communications, *IEEE J. on Selected Areas in Commun.*, vol.8, pp. 683-690, May, 1990

[4] C. Ergun and K. Hacioglu, Multiuser detection using a genetic algorithm in CDMA communications systems, *IEEE Trans. Commun.*, vol. 48, pp. 1374–1383, Aug. 2000.

[5] M. J. Juntti, T. Schl¨osser, J. O. Lilleberg, Genetic algorithms for multiuser detection in synchronous CDMA, *IEEE ISIT'97*, (Ulm, Germany), p. 492, 1997.

[6] K. Yen ,L. Hanzo, Hybrid genetic algorithm based multi-user detection schemes for synchronous CDMA systems, *IEEE Vehicular Techn. Conference*, Tokyo, May 15-18,2000.

[7] Peng Hui Tan, Lars K. Rasmussen, Multiuser Detection in CDMA—A Comparison of Relaxations, Exact, and Heuristic Search Methods, *IEEE Tr. Wireless Comm.*, Vol. 3, N5, 2004

[8] Arnaudov Rumen, Rossen Miletiev - "Analysis of the irregularly sampled signals above the Nyquist limit," Metrology and Measurement Systems, Vol.XIII, No. 3, 2006, pp.231-236, Poland.