Analysis of Triple SC over Constant Correlated Rayleigh Signal and Interference Based on Signal to Interference Ratio

Mihajlo Stefanović[1], Stefan Panić[2], Aleksandar Mosić[3], Srđan Jovković[4]

Abstract- **in this paper SC (Selection Combining) diversity system with three branches is analysed. We are considering case when desired signal and co-channel interferences have Rayleigh model of distribution with constant correlatiion. Because detection at SC receiver is based regarding SIR (SIR-signal-to-interference ratio), in a paper we have derive**

Keywords: **SC with three branches, SIR, Rayleigh model with constant correlation**

I. INTRODUCTION

Various techniques for reducing fading effect and influence of cochannel interference are used in wireless communication systems. Interest in wireless communications has increased recently due to the rapid growth of mobile communications as well as the emergence of wireless Local Area Network (LAN) technologies. Diversity reception is an effective remedy that exploits the principle of providing the receiver with multiple faded replicas of the same information-bearing signal [1]. The goal of diversity techniques is to increase channel capacity and to upgrade transmission reliability without increasing transmission power and bandwidth. Space diversity is an efficient method for amelioration system's quality of service (QoS) when multiple receiver antennas are used .There are several principal types of combining techniques and division can be generally performed by their dependence on complexity restriction put on the communication system and amount of channel state information available at the receiver. One of the least complicated combining methods is selection combining (SC). Combining techniques like equal gain combining (EGC) and maximal ratio combining (MRC) require all or some of the amount of the channel state information of received signal. MRC and EGC combining techniques require separate receiver chain for each branch of the diversity system, which increase its complexity. In opposition to these combining techniques, SC receiver process only one of the diversity branches, and is much simpler for practical realization.

[1]Mihajlo Stefanovic is with the Faculty of Electronic Engineering, Aleksandra Medvedeva 14, 18000, Nis, Serbia email: misa@elfak.ni.ac.yu

[2]Stefan Panić is with the Faculty of Electronic Engineering, Aleksandra Medvedeva 14, 18000, Nis, Serbia email: stefanpnc@yahoo.com

[3]Aleksandar Mosić is with the Faculty of Electronic Engineering,Aleksandra Medvedeva 14, 18000, Nis, Serbia email: sknme@ptt.yu

[4]Srđan Jovković is with the Faculty of Electronic Engineering,Aleksandra Medvedeva 14, 18000, Nis, Serbia

In general, selection combining, assuming that noise power is equally distributed over branches, selects the branch with the highest signal-to-noise ratio (SNR), that is the branch with the strongest signal [2]. Similarly to previous, there is type of selection combining that chooses the branch with highest signal and noise sum.In fading environments as in cellular communications systems where the level of the cochannel interference is sufficiently high as compared to the thermal noise, SC selects the branch with the highest signal-to-interference ratio (SIR-based selection diversity) This type of SC in which the branch with the highest SIR is selected, can be measured in real time both in base stations and in mobile stations using specific SIR estimators as well as those for both analog and digital wireless systems (e.g., GSM, IS-54) .Most of the recently the published papers assume independent fading between the diversity branches and also between the cochannel interferers.

However, independent fading assumes antenna elements to be placed sufficiently apart, which is not general case in practice due to insufficient spacing between antennas, when diversity system is applied on small terminals with multiple antennas, correlation arises between branches[3].

The effect of correlated fading has been extensively analyzed on the performance metrics of wireless communication system. In recent works[4,5] the joint PDF and CDF of the multivariate Nakagami-*m* and Rayleigh distributions, respectively, with exponential correlation. In paper [6] analysis of signal combining for Nakagami-*m* distributed with constant correlation model of fading has been given, but with the total independence between interferences received on any pair of inputs of the combiner. More general case is when, the same correlation is present between the signals and interferences. Moreover to the best author's knowledge, no analytical study of multibranch selection combining involving assumed correlated Rayleigh fading for both desired signal and co-channel interference, has been reported in the literature.

In this paper, we consider diversity system with multiple correlated Rayleigh fading channels with constant correlation model in the presence of mutually correlated interferences. We model fading and interference by Rayleigh distribution with constant correlation model, which is an adequate for multipath waves propagating in a nonhomogenous environment

In order to study the effectiveness of any modulation scheme and the type of diversity used, it is required to evaluate the system's performance over the channel conditions [2]. In this paper, for proposed system model,

expressions for probability distribution function (PDF) and cumulative distribution function (CDF) of the output SIR for selection combining diversity are derived. Numerical results for PDF and CDF are graphically presented.

Furthermore, closed-form expressions for important performance measures such as the outage probability is obtained. Outage probability is shown graphically for different system parameters. Using closed-form formulae, average error probability is efficiently evaluated for several modulation schemes.

II. STATISTICS OF THE SC OUTPUT SIR

The Rayleigh distribution is the most widely used distribution to describe the received envelope value. The Rayleigh flat fading channel model assumes that all the components that make up the resultant received signal are reflected or scattered and there is no direct path from the transmitter to the receiver[7]. In provides good fits to collected data in indoor and outdoor mobile-radio environments and is used in many wireless communications applications. In this paper, wireless communication system with triple SIR-based SC diversity is considered. The desired signal received by the *i*-th antenna can be written as [3]:

$$D_i(t) = R_i e^{j\phi_i(t)} e^{j[2\pi f_c t + \Phi(t)]}, \quad i=1,2,3 \qquad (1)$$

where f_c is carrier frequency, $\Phi(t)$ desired information signal, $\phi_i(t)$ the random phase uniformly distributed in $[0.2\pi]$, and $Ri(t)$, a Rayleigh distributed random amplitude process given by [7]:

$$f_{R_i}(t) = \frac{t}{\Omega}\exp\left(-\frac{t^2}{\Omega}\right), \qquad t \geq 0 \qquad (2)$$

where $\Gamma(\bullet)$ is the Gamma function, $\Omega=t^2/m$, with t^2 being the average signal power, and m is the inverse normalized variance of t^2, whitch must satisfy $m \geq 1/2$, describing the fading severity. The resultant interfering signal received by the *i*-th antenna is:

$$C_i(t) = r_i(t) e^{j\theta_i(t)} e^{j[2\pi f_c t + \psi(t)]}, \quad i=1,2,3 \qquad (3)$$

where $r_i(t)$ is also Rayleigh distributed random amplitude process, $\theta_i(t)$ is the random phase, and $\psi(t)$ is the information signal. This model refers to the case of a single cochannel interferer.

The performance of the multibranch SC can be carried out by considering, as in [2], the effect of only the strongest interferer, assuming that the remaining that is uncorrelated between antennas. Furthermore, $R_i(t)$, $r_i(t)$, $\phi_i(t)$, and $\theta_i(t)$are assumed to be mutually independent is sufficiently high for the effect of thermal noise on system performance to be negligible (interference-limited environment) [3]. Now, due to insufficient antennae spacing, both desired and interfering signal envelopes experience correlative multivariate Rayleigh fading with joint distributions. We are considering constant correlation Rayleigh model of distribution. The constant correlation model [8] can be obtained from by setting $\Sigma_{i,j} \equiv 1$ for i = j and $\Sigma_{i,j} \equiv \rho$ for i=j in correlation matrix, where ρ denotes the power correlation coefficient defined as $cov(R_i^2, R_j^2)/(var(R_i^2)var(R_j^2))^{1/2}$. In figure 1 we have presented the model of triple SC diversity. Input signals into SC are λ_1, λ_2 and λ_3, while output signal is λ.

Now joint distributions of pdf for both desired and interfering signal correlated envelopes for multi-branch signal combiner could be expressed by[6], substituting $m_c=m_d=1$:

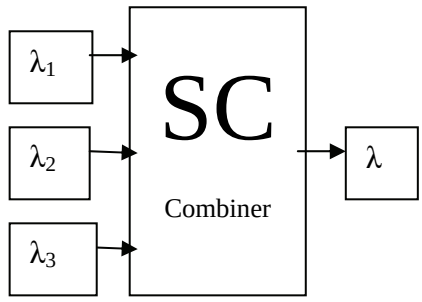

Fig. 1. Triple diversity sistem model

$$\begin{aligned} p(R_1,R_2,R_3) = {} & 2\left(1-\sqrt{\rho}\right)\sum_{k_1=0}^{\infty}\sum_{k_2=0}^{\infty}\sum_{k_3=0}^{\infty} \frac{2^3}{\Gamma(1+k_1)\Gamma(1+k_2)\Gamma(1+k_3)} \\ & \times \frac{\Gamma(1+k_1+k_2+.k_3)}{k_1!k_2!k_3!}\rho^{\frac{k_1+k_2+k_3}{2}}\left(\frac{1}{1+2\sqrt{\rho}}\right)^{1+k_1+k_2+k_3} \\ & \times\left(\frac{1}{\Omega_1\left(1-\sqrt{\rho}\right)}\right)^{1+k_1}\left(\frac{1}{\Omega_2\left(1-\sqrt{\rho}\right)}\right)^{1+k_2}\left(\frac{1}{\Omega_3\left(1-\sqrt{\rho}\right)}\right)^{1+k_3} R_1^{2+2k_1-1}R_2^{2+2k_2-1}R_3^{2+2k_3-1} \\ & \times\exp\left(-\frac{R_1^2}{\Omega_1\left(1-\sqrt{\rho}\right)}\right)\exp\left(-\frac{R_2^2}{\Omega_2\left(1-\sqrt{\rho}\right)}\right)\exp\left(-\frac{R_3^2}{\Omega_3\left(1-\sqrt{\rho}\right)}\right), \end{aligned} \qquad (4)$$

$$\begin{aligned} p(r_1,r_2,r_3) = {} & 2\left(1-\sqrt{\rho}\right)\sum_{l_1=0}^{\infty}\sum_{l_2=0}^{\infty}\sum_{l_3=0}^{\infty} \frac{2^3}{\Gamma(1+l_1)\Gamma(1+l_2)\Gamma(1+l_3)} \\ & \times \frac{\Gamma(1+l_1+l_2+l_3)}{l_1!l_2!l_3!}\rho^{\frac{l_1+l_2+l_3}{2}}\left(\frac{1}{1+2\sqrt{\rho}}\right)^{1+l_1+l_2+l_3} \\ & \times\left(\frac{1}{\Omega_{i1}\left(1-\sqrt{\rho}\right)}\right)^{1+l_1}\left(\frac{1}{\Omega_{i2}\left(1-\sqrt{\rho}\right)}\right)^{1+l_2}\left(\frac{1}{\Omega_{i3}\left(1-\sqrt{\rho}\right)}\right)^{1+l_3} r_1^{2+2l_1-1}r_2^{2+2l_2-1}r_3^{2+2l_3-1} \\ & \times\exp\left(-\frac{r_1^2}{\Omega_{i1}\left(1-\sqrt{\rho}\right)}\right)\exp\left(-\frac{r_2^2}{\Omega_{i2}\left(1-\sqrt{\rho}\right)}\right)\exp\left(-\frac{r_3^2}{\Omega_{i3}\left(1-\sqrt{\rho}\right)}\right). \end{aligned} \qquad (5)$$

ρ is the correlation coefficient. $\Omega_k=\overline{R_k^2}$ and $\Omega_{ik}=\overline{r_k^2}$ are the average signal desired and interference powers at *i*-th branch, respectively.

Instantaneous values of SIR at the k-th diversity branch input can be defined as $\lambda_k=R_k^2/r_k^2$. The selection combiner chooses and outputs the branch with the largest SIR.

$$\lambda = \lambda_{out} = \max(\lambda_1, \lambda_2, \lambda_3). \qquad (6)$$

Let $S_k = \Omega_k / \Omega_{ik}$ be the average SIR's at the *k*-th input branch of the multi-branch selection combiner. Joint probability density function of instantaneous values of SIR in n output branches λ_k, k=1,2,3 as in [5]:

$$p_{\lambda_1,\lambda_2..\lambda_3}(t_1,t_2,t_3)=\frac{1}{2^3\sqrt{t_1t_2t_3}}\,p_{R_1,R_2,R_3}\left(r_1\sqrt{t_1},r_2\sqrt{t_2},r_3\sqrt{t_3}\right)p_{r_1,r_2r_3}(r_1,r_2,r_3)$$
$$\times\, r_1r_2r_3dr_1dr_2dr_3 \qquad (7)$$

Substituting (4) and (5) in (7), $p_{\lambda_1,\lambda_2..,\lambda_n}(t_1,t_2,...,t_n)$ can be written as:

$$p_{\lambda_1,\lambda_2,\lambda_3}(t_1,t_2,t_3)=\sum_{k_1=0}^{\infty}\sum_{k_2=0}^{\infty}\sum_{k_3=0}^{\infty}\sum_{l_1=0}^{\infty}\sum_{l_2=0}^{\infty}\sum_{l_3=0}^{\infty}$$
$$\times G_1(S_1)^{1+l_1}(S_2)^{1+l_2}(S_3)^{1+l_3}$$
$$\times\frac{t_1^{k_1}}{(t_1+S_1)^{2+k_1+l_1}}\frac{t_2^{k_2}}{(t_2+S_2)^{2+k_2+l_2}}\frac{t_3^{k_3}}{(t_3+S_3)^{2+k_3+l_3}}, \qquad (8)$$

with:

$$G_1=4\left(1-\sqrt{\rho}\right)^2\frac{\Gamma(1+k_1+k_2+k_3)\Gamma(1+l_1+l_2+l_3)}{\Gamma(1+k_1)\Gamma(1+k_2)\Gamma(1+k_3)}$$
$$\times\frac{\Gamma(2+k_1+l_1)\Gamma(2+k_2+l_2)\Gamma(2+k_3+l_3)}{\Gamma(1+l_1)\Gamma(1+l_2)\Gamma(1+l_3)k_1!k_2!k_3!l_1!l_2!l_3!}$$
$$\times\rho^{\frac{k_1+k_2+k_3+l_1+l_2+l_3}{2}}\left(\frac{1}{1+2\sqrt{\rho}}\right)^{2+k_1+k_2+k_3+l_1+l_2+l_3}. \qquad (9)$$

For this case joint cumulative distribution function can be written as [3]:

$$F_{\lambda_1,\lambda_2,\lambda_3}(t_1,t_2,t_3)=\int_0^\infty\int_0^\infty\int_0^\infty p_{\lambda_1,\lambda_2,\lambda_3}(x_1,x_2,x_3)dx_1dx_2dx_3 \qquad (10)$$

Substituting expression (7) in (8), and after integration joint cumulative distribution function becomes:

$$F_{\lambda_1,\lambda_2,\lambda_3}(t_1,t_2,t_3)=\sum_{k_1=0}^{\infty}\sum_{k_2=0}^{\infty}\sum_{k_3=0}^{\infty}\sum_{l_1=0}^{\infty}\sum_{l_2=0}^{\infty}\sum_{l_3=0}^{\infty}G_2$$
$$\times\left(\frac{t_1}{S_1+t_1}\right)^{1+k_1}\left(\frac{t_2}{S_2+t_2}\right)^{1+k_2}\left(\frac{t_3}{S_3+t_3}\right)^{1+k_3}$$
$$\times{}_2F_1\left(1+k_1,-l_1;2+k_1;\frac{t_1}{S_1+t_1}\right)$$
$$\times{}_2F_1\left(1+k_2,-l_2;2+k_2;\frac{t_2}{S_2+t_2}\right)$$
$$\times{}_2F_1\left(1+k_3,-l_3;2+k_3;\frac{t_3}{S_3+t_3}\right), \qquad (11)$$

with:

$$G_2=G_1\frac{1}{(1+k_1)(1+k_2)(1+k_3)}, \qquad (12)$$

and ${}_2F_1$ $(u_1,u_2;u_3;x)$, being the Gaussian hypergeometric function [9, (9.100)].

Cumulative distribution function of output SIR, could be derived from (9) by equating the arguments $t_1=t_2=t_3=t$ as in [3]:

$$F_\lambda(t)=\sum_{k_1=0}^{\infty}\sum_{k_2=0}^{\infty}\sum_{k_3=0}^{\infty}\sum_{l_1=0}^{\infty}\sum_{l_2=0}^{\infty}\sum_{l_3=0}^{\infty}G_2$$
$$\times\frac{t^{3+k_1+k_2+k_3}}{(S_1+t)^{1+k_1}(S_2+t)^{1+k_2}(S_3+t)^{1+k_3}}$$
$$\times{}_2F_1\left(1+k_1,-l_1;2+k_1;\frac{t}{S_1+t}\right)$$
$$\times{}_2F_1\left(1+k_2,-l_2;2+k_2;\frac{t}{S_2+t}\right)$$
$$\times{}_2F_1\left(1+k_3,-l_3;2+k_3;\frac{t}{S_3+t}\right) \qquad (13)$$

The nested infinite sum in (13), as one can see from Table 1, for three branches diversity case, converges for any value of the parameters ρ,S_1, S_2, S_3. The number of the terms need to be summed to achieve a desired accuracy, depend strongly on the correlation coefficient ρ. The number of the terms increases as correlation coefficient increases.

Probability density function (PDF) of the output SIR can be obtained easily from previous expression:

$$p_\lambda(t)=\frac{d}{dt}F_\lambda(t)=\sum_{k_1=0}^{\infty}\sum_{k_2=0}^{\infty}\sum_{k_3=0}^{\infty}\sum_{l_1=0}^{\infty}\sum_{l_2=0}^{\infty}\sum_{l_3=0}^{\infty}G_3t^{3m_U+k_1+k_2+k_3}$$
$$\times\left(A_1(t)+A_2(t)+A_3(t)\right), \qquad (14)$$

with :

$$G_3=\frac{G_2}{(S_1+t)^{1+k_1}(S_2+t)^{1+k_2}(S_3+t)^{1+k_3}},$$
$$A_1(t)=\frac{1}{(1+k_2)(1+k_3)}\left(\frac{S_1}{S_1+t}\right)^{1+l_1}$$
$$\times{}_2F_1\left(1+k_2,-l_2;2+k_2;\frac{t}{S_2+t}\right)$$
$$\times{}_2F_1\left(1+k_3,-l_3;2+k_3;\frac{t}{S_3+t}\right),$$
$$A_2(t)=\frac{1}{(1+k_1)(1+k_3)}\left(\frac{S_2}{S_2+t}\right)^{1+l_2}$$
$$\times{}_2F_1\left(1+k_1,-l_1;2+k_1;\frac{t}{S_1+t}\right)$$
$$\times{}_2F_1\left(1+k_3,-l_3;2+k_3;\frac{t}{S_3+t}\right),$$
$$A_3(t)=\frac{1}{(1+k_1)(1+k_2)}\left(\frac{S_3}{S_3+t}\right)^{1+l_3}$$
$$\times{}_2F_1\left(k_1,-l_1;2+k_1;\frac{t}{S_1+t}\right)$$
$$\times{}_2F_1\left(1+k_2,-l_2;2+k_2;\frac{t}{S_2+t}\right) \qquad (15).$$

Fig. 2 shows probability density function of output signal to interference ratio for balanced and unbalanced ratio of SIR at the input of the branches and various values of correlation coefficient.

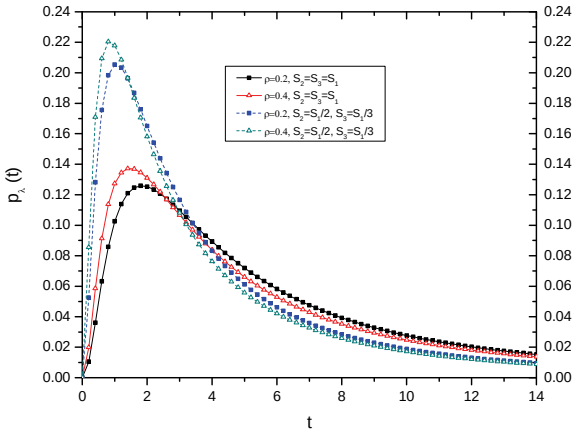

Fig 2. Probability density function of output SIR.

III. CONCLUSION

In this paper, system performances of selection combining and correlated Rayleigh channels with constant correlation model are analyzed. Fading between the diversity branches and between interferers is correlated and Rayleigh distributed with constant correlation model. The complete statistics for the SC output SIR is given in the closed form, i.e., PDF, CDF, Outage probability, average probability. Using these new formulae, average error probability was efficiently evaluated for several modulation schemes. As an illustration of the mathematical formalism, numerical results of these performance criteria are presented, describing their dependence on correlation coefficient and fading severity. The main contribution of this analysis for multibranch signal combiner is that it has been done for general case of correlated cochanel interference.

REFERENCES

[1] Stuber G. Principles of Mobile Communication. Boston:Kluwer Academic Publishers; 2000.

[2] Lee WCY. Mobile communications engineering, New York: Mc-Graw-Hill; 0-7803-7005-8/01, IEEE, 2001, 1992.

[3] Stefanović M. et al. Performance analysis of system with selection combining over correlated Weibull fading channels in the presence of cochannel interference Int J Electron Commun (AEU) (2007) doi:10.1016/j.aeue.2007.09. 006.

[4] Karagiannis G., Zogas D. On the Multivariate Nakagami-m Distribution With Exponential Correlation, IEEE Transtacion on Communications, VOL. 51, NO.8. August 2003.

[5] Petrović M, Mosić A, Panić S. Performanse SC diverziti sistema sa tri grane sa Rejlijevim signalom i Rejlijevom interferencijom, Infoteh Jahorina 2008

[6] Reig J. Multivariate Nakagami-m distribution with constant correlation model. Int J Electron Commun (AEU), (2007), doi: 10.1016/j.aeue.2007.10.009.

[7] Sudhanshu Gaur. Analysis of Advanced Diversity Receivers for. Fading Channels, Blacksburg, Virginia, 2003

[8] Okechukwu C. Ugweje and Valentine A. Aalo. “Performance of Selection Diversity System in Correlated Nakagami Fading”. In Proc. IEEE Veh. Technol. Conf. (VTC’97), pages 1448–1492. IEEE, May 1997

[9] I. Gradshteyn and I. Ryzhik. Tables of Integrals, Series, and products. Academic Press, New York, 1980 .