Analysis of Model of Switched Non-uniform Scalar Quantization Model of Laplacean Source in a Dynamic Range of Power

Zoran Perić[1], Stefan Panić[2], Aleksandar Mosić[3]

Abstract—**In this paper switched nonuniform scalar quantization model is analyzed for the case when the power of an input signal varies in a wide range. This model of scalar quantization is used in order to give higher quality by increasing signal-to-quantization noise ratio (SNRQ) in a wide range of signal volumes (variances) with respect to it's necessary robustness over a broad range of input variances. We observed μ-low compoundor implementation to achieve compromise between high-rate digitalization and variance adaptation. The main contribution of this model is the possibility of his applying for digitalization of continuous signals in wide range and increasing of quality comparing with nonuniform compoundor.**

Keywords: **switching quantization, μ-law compounding, variance adaptation, Laplacean source**

I. INTRODUCTION

Quantization denotes the heart of analog to digital conversion and efficient technique of data compression. A/D conversion has many goals: 1) The minimization of necessary communication capacity of high quality signal transmission like picture or speech signal transmissions; 2) Minimizing the memory capacity for storing that kind of information into fast mediums or data bases; 3) The simpler correct description of processed signal in order to minimize algorithm for signal processing. The history of quantization dates back to 1948 (early development of pulse code modulation). Quantizers play an important role in theory and practice of modern day signal processing. Scalar quantizers are primarily used for A/D conversion, while vector quantizes are used for sophisticated digital signal processing. A vast amount of research has been made in the area of quantization. Important issues from the engineer's point of view are the design and implementation of quantizers to meet performance objectives. In a number of papers the quantization of Laplacean source was analyzed since the pdf of the instantaneous speech signal values for higher number of digitalization samples is better represented by Laplacean then the Gaussian function [1], [2]. In papers [3], [4], the switched nonuniform polar quantization for Laplacean source is asymptotically analyzed for the case when the power of an input signal varies in a wide range. Analyses of nonlinear quantization optimization in wide volume range are given in [5], [6].In [5] is presented that for chosen μ=102, quantizer is optimized on total mean squared error in observed volume range. In this paper we analyze robust and switched nonuniform scalar quantization to achieve compromise between high-rate digitalization and variance adaptation. The goal of our research is to find a simple way to realize a nonuniform quantizer system having high quality performance but maintaining robustness in wide range of input signal. First, the bases of nonuniform scalar quantization are given in chapter 2. In chapter 3. we have developed expressions for granular and overload distortion, using Bennett's integral on Laplacean distribution. Then in chapter 4. Our model is presented. In chapter 5. We have upgraded our model. Here is presented how the increase of number of quantizers in switching scheme affects the signal-to-quantization-noise ratio dependence of input power. Also we have discussed how constant μ should be chosen in order for total distortion to be as minimum as possible in the wide volume range of input signal. The optimization is made for one or more quantizers in the considered volume range based on total distortion. Also here we observe dependence between bit rate per sample and frame length. Finally, in conclusion we have discussed obtained results, and on these bases, we derived conclusions about the possibilities of this switched quantization application in speech processing. Contribution of this model is increasing of quality and the possibility of his applying for digitalization of continuous signals in wide range.

II. COMMANDING MODEL

Let N-point scalar quantizer $Q^{(N)}$ be characterized in terms of a set of N real-valued quantization points $\{y_1^{(N)}, y_2^{(N)},\ldots, y_N^{(N)}\}$, and decision thresholds $\{t_0^{(N)}, t_1^{(N)},\ldots, t_N^{(N)}\}$. Quantization rule is many-to-one mapping, $Q^{(N)}(x)=y_i$ if $t_{i-1}^{(N)}<x\leq t_i^{(N)}$ for i=1,2,…,N, where decision thresholds are $-\infty=t_0^{(N)}< t_1^{(N)}<\ldots< t_N^{(N)}=\infty$. In other words, a quantized signal has the value $y_i^{(N)}$ when the original signal belongs to the quantization cell $S_i^{(N)}=(t_{i-1}^{(N)}, t_i^{(N)}]$ for i=1,2,…,N. The negative thresholds and quantization points are mirror images of the nonnegative counterparts, mirrored about zero. Cells $S_2^{(N)},\ldots,S_{N-1}^{(N)}$ will be called inner cells, while $S_1^{(N)}$ and $S_N^{(N)}$ will be called outer cells.

When the inner cells are equally sized, the quantizer is called uniform quantizer. Otherwise, the quantizer is nonuniform. A general model for any nonuniform quantizer based on compounding technique can be structured as

[1]Zoran Perić is with the Faculty of Electronic Engineering, Aleksandra Medvedeva 14, 18000, Nis, Serbia, E-mail: peric@elfak.ni.ac.yu
[2]Stefan Panić is with the Faculty of Electronic Engineering, Aleksandra Medvedeva 14, 18000, Nis, Serbia, E-mail: stefanpnc@yahoo.com
[3]Aleksandar Mosić is with the Faculty of Electronic Engineering,Aleksandra Medvedeva 14, 18000, Nis, Serbia, E-mail: sknme@ptt.yu

illustrated in Figure 1. where c(x) and $c^{-1}(x)$ are compressor and expandor functions respectively. Namely, nonuniform quantization can be achieved by compressing the signal x using nonuniform compressor characteristic c(·) (also called compounding low), by quantizing the compressed signal c(x) employing a uniform quantizer, and by expanding the quantized version of the compressed signal using a nonuniform transfer characteristic $c^{-1}(\cdot)$ inverse to that of the compressor. The overall structure of a nonuniform quantizer consisting of a compressor, a uniform quantizer, and expandor in casscade is called compoundor.

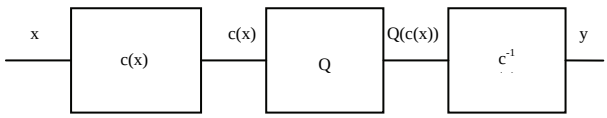

Fig. 1. Block diagram of compounding technique

In situations such as speech coding, the exact value of the input variance is not known in advance; and in addition it tends to change with time. In such situations, a signal-to-quantization ratio that is constant over a broad range of input variance can be obtained by using logarithmic compounding law. The μ-law compounding is used for PCM telephone systems in the USA, Canada and Japan, with the standard value of μ = 255, and μ-law compression characteristic is characterized by:

$$c(x) = x_{\max} \frac{\ln(1+\mu \frac{|x|}{x_{\max}})}{\ln(1+\mu)} \operatorname{sgn} x \quad . \tag{1}$$

III. Distortion Discussion

An *N*-point nonuniform scalar quantizer for a source characterized as a continuous random variable with probability density *p(x)* has distortion defined as the expected mean square error between original and quantized signal. Total distortion consists of two components, granular and overload distortion. Symbolically

$$D_t = D_g + D_o . \tag{2}$$

In this paper, we have discussed Laplacean source in wide broad of range. Probability density function of Laplacean original random variable *x* with unit variance can be expressed by:

$$p(x,\sigma) = \frac{\sqrt{2}}{2\sigma} e^{-\frac{|x|\sqrt{2}}{\sigma}} . \tag{3}$$

so the granular and overload distortions are considering that y_N can be approximated with $x_{max,}$ defined as:

$$D_g = \frac{\ln^2(1+\mu)}{3N^2}\sigma^2\left[\frac{1}{\mu^2}\frac{x_{\max}^2}{\sigma^2}+\frac{x_{\max}}{\sigma}\frac{\sqrt{2}}{\mu}+1\right], \tag{4}$$

$$D_o = \sigma^2 e^{-\frac{\sqrt{2}x_{\max}}{\sigma}} , \tag{5}$$

Since we now know how to calculate distortion for quantization of a Laplacean source that has variable average power in a wide range, we can find the signal power-to-total-distortion ratio (dB), which is denoted as signal-to-quantization-noise ratio *SNRQ* instantaneous value of a signal masked by Gaussian distributed noise at time:

$$D_t = \frac{\ln^2(1+\mu)}{3N^2}\sigma^2\left[\frac{1}{\mu^2}\frac{x_{\max}^2}{\sigma^2}+\frac{x_{\max}}{\sigma}\frac{\sqrt{2}}{\mu}+1\right]+\sigma^2 e^{-\frac{\sqrt{2}x_{\max}}{\sigma}} , \tag{6}$$

$$\text{SNRQ} = 10 \lg \frac{\sigma^2}{D_t} , \tag{7}$$

$$SNRQ = 10\lg \frac{1}{\frac{\ln^2(1+\mu)}{3N^2}\left(1+\frac{x_{\max}}{\sigma}\frac{\sqrt{2}}{\mu}+\frac{1}{\mu^2}\frac{x^2_{\max}}{\sigma^2}\right)+e^{-\frac{\sqrt{2}x_{\max}}{\sigma}}} . \tag{8}$$

IV. Switching Nonuniform Scalar Quantization Model

We will solve the presented problem with switching quantization application. One simple technique is switched codebook adaptive scalar quantization. The basic scheme of robust and switched codebook adaptation is shown in Fig. 2. This technique uses a classifier that looks at the contents of the input frame buffer and decides that the next block of samples belongs to a particular statistical class of samples from a finite set of *K* possible classes. Namely, the index specifying the class is used to select a particular codebook from a redesigned set of *K* codebooks. In addition, this index is transmitted as side information to the receiver. Then, each sample in the block is encoded by the scalar quantizer, which performs a search through the selected codebook.

One frame has length of M. The index to identify the class is sent on the end of block. If each of the *K* codebooks has size *N*, the bit rate per sample is:

$$R = \log_2 N + \frac{\log_2 K}{M} . \tag{9}$$

Codebook size *N* depends on number of bits that are used for the encoding *n*. The relation between *N* and *n* is $N = 2^n$, where *n* is the number of bits per sample.

We will use this technique for our problem solving. We have *K* codebooks,i.e., K nonuniform scalar quantizers designed for particular values σ_{0j} to cover input power range

$\sigma_{0j}^2/\sigma^2_0 \in [\sigma^2_{1j}/\sigma^2_0, \sigma^2_{2j}/\sigma^2_0)$,where σ_0 denotes referent value of input power and $\cap^K_{j=1} [\sigma^2_{1j}/\sigma^2_0$ [dB], $\sigma^2_{2j}/\sigma^2_{0j}$[dB])= [-20,20).

Maximal amplitude for each quantizer x_{maxj} (each codebook j) is chosen in a way, that for each input power range $\sigma_{0j}^2/\sigma^2_0 \in [\sigma^2_{1j}/\sigma^2_0, \sigma^2_{2j}/\sigma^2_0)$ the total distortion has a minimum. The procedure is as follows: We optimize total distortion (13) to have a minimum. The optimization is going over parameter c, witch denotes ratio x_{max}/σ. After finding c_{opt}, for corresponding μ, which satisfies the following term:

$$\frac{\partial D_t}{\partial c} = 0 \Rightarrow c = c_{opt} \quad . \tag{10}$$

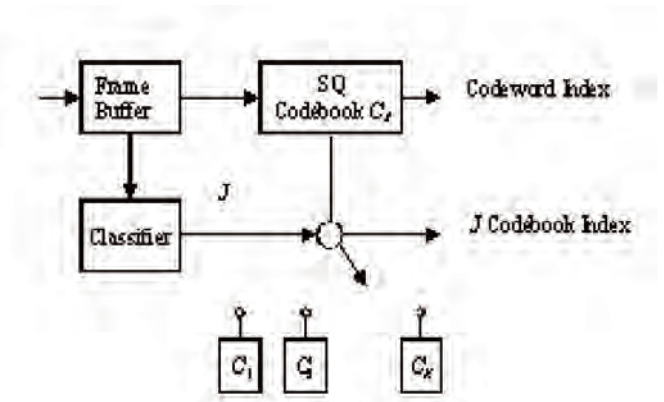

Fig. 2 Switched codebook adaptive scalar quantization

Now, we can easily evaluate x_{maxj} for each input power range $\sigma_{0j}^2/\sigma^2_0 \in [\sigma^2_{1j}/\sigma^2_0, \sigma^2_{2j}/\sigma^2_0)$, from the expression $x_{max\ j} = c_{opt}\ \sigma_{0j}$. Each particular value σ_{0j} can be represented as $\sigma_{0j} = k_j\ \sigma_0$, where k_j is called adaptation factor. During the switched quantizer design ,a particular type of memory is needed. Each input class $j = 1, 2, \ldots, K$ requires one quantizer, for which we know adaptation factor k_j and input power range $[\sigma^2_{1j}/\sigma^2_0, \sigma^2_{2j}/\sigma^2_0)$ for which the quantizer is designed. Also we have to store in memory the corresponding μ and c_{opt}.

V. Discussion and Numerical Results

First, let us examine switched codebook adaptive scalar quantization model with only one quantizer present. Here, only parameter that can be optimized, for achieving high quality of transmission by increasing signal-to-quantization noise ratio (SNRQ), in a wide range of signal volumes (variances) with respect to it's necessary robustness over a broad range of input variances is the μ parameter in expression for SNRQ. Parameter μ can be optimized, for the case when expression for SNRQ has his maximum, which means that expression (7) for total distortion should have his minimum. Optimization of total distortion is derived in two steps. First, we accomplish adaptation on maximal amplitude of input signal, or the optimization for parameter c in corespondency to μ, which is described as:

$$\frac{\partial D_t}{\partial c} = 0 \Rightarrow c = c_{opt} \quad , \tag{11}$$

And then in the second step, we find required μ_{opt}, for witch total distortion should have his minimum, which is described as:

$$\frac{\partial D_t}{\partial \mu}\Big|_{c=c_{opt}(\mu)} = 0 \Rightarrow \mu = \mu_{opt}, D_t(\mu_{opt}) = D_{t\min} . \tag{12}$$

These two steps can be represented as the following equation system:

$$\frac{\partial D_t}{\partial c} = \sigma^2 \left(-\sqrt{2} e^{-\sqrt{2}c} + \frac{\left(\frac{2c}{\mu^2} + \frac{\sqrt{2}}{\mu}\right)\ln^2(1+\mu)}{3N^2} \right) = 0 , \tag{13}$$

$$\frac{\partial D_t}{\partial \mu}\Big|_{c=c_{opt}(\mu)} = \sigma^2 \left(\frac{2\left(1 + \frac{c_{opt}^2(\mu)}{\mu^2} + \frac{\sqrt{2}c_{opt}(\mu)}{\mu}\right)\ln(1+\mu)}{3N^2(1+\mu)} - \frac{\left(\frac{2c_{opt}^2(\mu)}{\mu^3} + \frac{\sqrt{2}c_{opt}(\mu)}{\mu^2}\right)\ln^2(1+\mu)}{3N^2} \right) = 0 \tag{14}$$

For N=256, numerical solution for this system is c_{opt}=8.8 and μ_{opt} = 17.

If there are not restrictive limitations about memory size and sample bit rate for the transmission system, then there is a possibility to choose optimal number of quantizers in our model, for which we can achieve high quality measured by SNQR, in a wide range of signal volumes (variances) with respect to it's necessary robustness over a broad range of input. If we increase number of quantizers K, there is a way to flatten the signal-to-quantization-noise-ratio dependence of input power in such a way that, if the memory size isn't the limiting factor, with data compression being disregarded, we will achieve a signal-to-noise ratio that does not have a large variation during input power changes which is shown in Figs 3, 4. and 5. In Fig 5, we can see that SQNR varies from it's peak value, for maximum 0.313 dB for each input power range $[\sigma^2_{1j}/\sigma^2_0, \sigma^2_{2j}/\sigma^2_0)$, $\cap^K_{j=1} [\sigma^2_{1j}/\sigma^2_0$ [dB], $\sigma^2_{2j}/\sigma^2_{0j}$[dB])= [-20,20), for which the quantizer is designed, in case of codebook size of 256 and 16 codebooks . There is a conclusion, that if we want to satisfy the same standard for varying of SQNR in twice larger input power range of [-40dB,40dB], we will have to use same codebook size for 32 codebooks. If we want to satisfy less restrictive standards of SQNR variance for each input power range $[\sigma^2_{1j}/\sigma^2_0, \sigma^2_{2j}/\sigma^2_0)$, we can use smaller number of codebooks, and if we want to achieve smaller peak value of SQNR, we can use smaller size of each codebook, for each input power range.

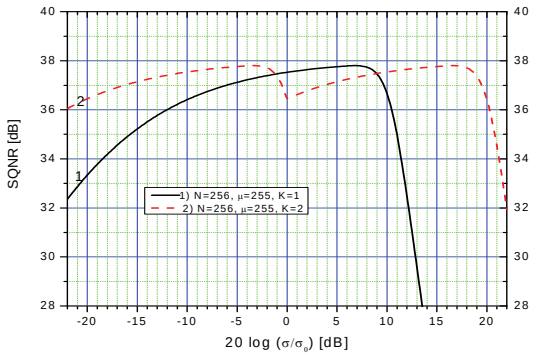

Fig. 3 Improvement of quality of transmission (SNRQ), for model implementations with two quantizers over robust quantization.

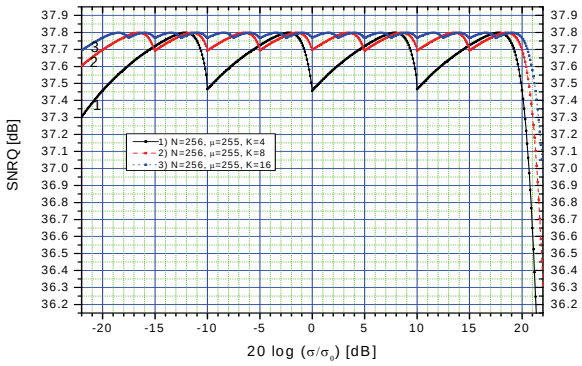

Fig. 4 Comparration of quality of transmission (SNRQ), for model implementations with four, eight and sixteen quantizers

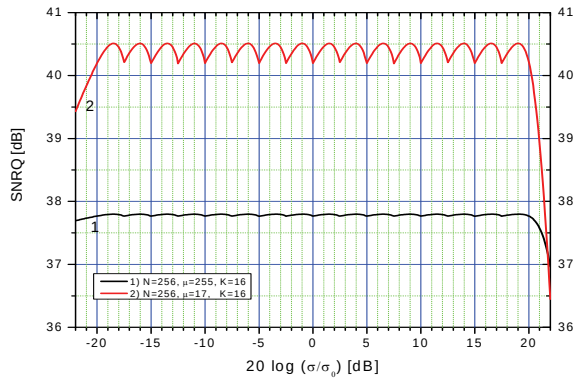

Fig. 5 Comparration of quality of transmission (SNRQ), for model implementations with sixteen quantizers for standard and optimized value of parameter μ

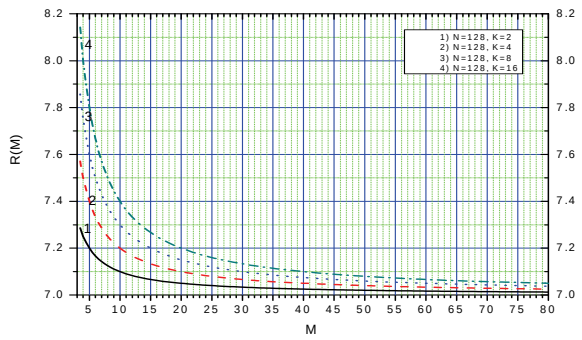

Fig. 6 Bit sample rate in function of frame length with respect to number of quantizers K

If we analyze bit sample rate in function of frame length with respect to number of quantizers K, we can se from Fig. 6, that for relatively small frame length of 80 samples, bit sample rate rapidly convergates to the value of bit sample rate of transmission without side information . So we can derive conclusion that memory size is much more restrictive limitation for multy-quantizer implementation, than sample rate is.

VI. Conclusion

We have suggested one model for switched nonuniform scalar quantizer that solves the problem of variable input power in a wide range. It is shown that this switched quantizer can be applied for coding of speech signals and other continuous signals. The dependence of quality and robustness of quantized signals is analyzed for broad range of input variances and corresponding number of codebooks (quantizers) with respect to system memory and sample bit rate. Also we have presented how adaptation on maximal amplitude of input signal can be derived by optimizing parameter μ, regarding the split of input variance range length based on number of codebooks used in this model. The analyses of codebook size and number of codebooks usage for satisfying requested terms of peak value for signal-to-quantization noise ratio and desired values of it's varying for wide range of power range is given.. Previously obtained results point to the conclusion that there is a possibility applying of this model for digitalization of continuous signals in wide range, because it can accomplish high quality of signal-to-quantization noise ratio (SNRQ), for digitalized signal in a wide range of signal volumes (variances), with respect to it's necessary robustness over a broad range of input variances.

References

[1] Jayant, N. S.—Noll, P. : Digital coding of waveforms, Prentice-Hall, New Jersey, 1984.

[2] G. Lukatela, D. Drajić, G. Petrović, R. Petrović, Digitalne telekomunikacije, Građevinska knjiga, Beograd 1981.

[3] Z. Perić, A. Jovanović, M. Stefanović, S. Bogosavljević, Switched Nonuniform Polar Quantization of Sources with a Wide Dynamic Range of Power, Journal of Communications Technology and Electronics, 2007, Vol. 52, No. 12, pp. 1340–1349.

[4] Z. Perić, V. Despotović, Encoder Design For Switched Piecewise Uniform Vector Quantization Of The Memoryless Two-Dimensional Laplacian Source, ISSN 1392 – 124X Information Technology and control, 2006, Vol.35, No.4.

[5] Z. Perić, I.Djordjević, M. Stefanović, S. Bogosavljević, Combined Source and Channel Coding of Speech Signal in Wide Volume Range, Proceedings of the IASTED), October 28-31, 1998-Las Vegas, Nevada, USA.

[6] Z.H. Perić, Quantization Optimizations of Speech Signal in Wide Volume Range, Electroniccs and Electrical Engineering No.3(45), 2003, pp 41-48.