Noise Modeling and Simulation for BJTS at Low Frequencies

Pesha D. Petrova[1], Dimitar P. Petrov[2]

Abstract – **A BJT noise model with the external base and emitter circuits modelled by Thévenin sources is synthesized. Two Vn – In low-frequency noise models are presented, too. The effect of the frequency, of the BJT small-signal ac current gain and of the source resistance on the noise is analysed. Noise simulations are performed. MATLAB simulation results are presented.**

Keywords – **BJT noise model, Thévenin source, MATLAB simulation.**

I. Introduction

The noise is among the key parameters of many today's communication systems. Therefore, noise modeling is a very important step for the computer-aided design of electronic circuits used in the modern communication systems.

In order to predict correctly the noise behavior of such systems, accurate noise models for semiconductor devices are required. Without them, the design and optimization of noise characteristics and parameters cannot be successful.

Since the key element in many circuits is the bipolar junction transistor, extensive work has been carried out in the field of noise modeling and analysis of this device. The existing BJT physical models [1, 2] are too complex and require many parameters. These models generally show good agreement with measured data, but some deviations can still be observed, since the correlation between voltage and current sources is completely ignored in these models. In many cases for practical applications, noise modeling for transistors can be split into a high and a low frequency segment. The low-frequency noise, dominated by the $1/f$ noise, is usually neglected, that is not correct enough.

On the base of the small-signal BJT models [1] and on the V_n - I_n noise sources an analytical approach to overcoming the above defined problems is proposed in this paper. The equivalent input noise, as well the correlation coefficient expressions corresponding to the low-frequency BJT noise models developed, are obtained. A MATLAB code is created and it can be used for noise analysis of the BJT electronic circuits. An example of simulating the BJT noise characteristics using the modeling expressions is presented as well.

[1]Pesha D. Petrova is with the Department of Communication Equipment and Technologies, Technical University of Gabrovo, 5300 Gabrovo, 4, Hadji Dimitar St., Bulgaria, E-mail: daneva@tugab.bg

[2]Dimitar D. Petrov is with the Department of Electrical Engineering, Technical University of Gabrovo, 5300 Gabrovo, 4 Hadji Dimitar St., Bulgaria, E-mail: dpetrov@tugab.bg

II. Low – Frequency BJT Noise Modeling

The BJT noise model at the low frequencies can be synthesized on the base of the BJT small – signal models which are commonly used to analyze BJT circuits. These are the hybrid - π model and the T model [2]. The two models give identical results.

The principal noise sources in a BJT are thermal noise in the base spreading resistance $r_{bb'}$, shot noise and flicker noise in the base bias current I_B, and the shot noise in the collector bias current I_C.

The BJT noise model with external base and emitter circuits is shown in Fig. 1.

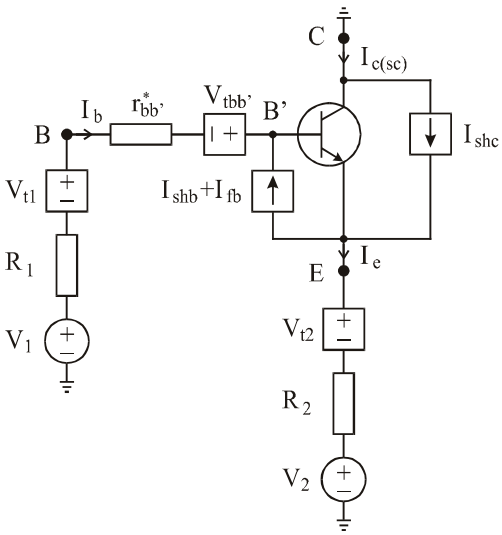

Fig.1. Low-frequency BJT noise model with base and emitter circuits modeled by Thévenin sources

The external base and emitter circuits are modeled by Thévenin equivalent circuits. With $V_2 = 0$, the circuit models a common - emitter or CE stage. With $V_1 = 0$, it models a common - base or CB stage. The noise sources $V_{tbb'}$, V_{t1}, and V_{t2}, respectively, model the thermal noise in $r_{bb'}$, R_1 and R_2. In the band Δf, the thermal noises have the following mean-square values

$$V_{tbb'}^2 = 4kTr_{bb'}\Delta f \quad (1)$$

$$V_{t1}^2 = 4kTR_1\Delta f \quad (2)$$

$$V_{t2}^2 = 4kTR_2\Delta f \quad (3)$$

where k is the Boltzmann's constant, and T is the absolute temperature.

The shot noise and flicker noise in the base bias current I_B are modeled by $I_{shb} + I_{fb}$, and the shot noise in the collector bias current I_C is modeled by I_{shc}. The mean - square noise current values are given by

$$i_{shb}^2 = 2qI_B\Delta f \tag{4}$$

$$i_{fb}^2 = \frac{K_F I_B^{A_F}\Delta f}{f} \tag{5}$$

$$i_{shc}^2 = 2qI_C\Delta f \tag{6}$$

where q is the electronic charge, K_F is the flicker noise coefficient, and A_F is the flicker noise exponent.

The short-circuit output collector current can be described by

$$I_{c(sc)} = G_{mb}V_{tb} - G_{me}V_{te} + I_{shc}. \tag{7}$$

The transconductances G_{mb} and G_{me}, respectively, can be expressed as

$$G_{mb} = \frac{\alpha}{r_e' + R_1 \, II \, r_o}\frac{r_o - R_1/\beta}{r_o + R_1} \tag{8}$$

$$G_{me} = \frac{\alpha}{r_e' + R_2 \, II \, r_o}\frac{r_o + r_e'/\alpha}{r_o + R_2} \quad . \tag{9}$$

In these equations, r_o is the collector–emitter resistance, β is the small-signal ac current gain, $\alpha = \beta/(1+\beta)$, and

$$r_e' = (R_2 + r_{bb'} + r_{b'e})/(1+\beta)$$

where $r_{b'e}$ is the small - signal base - emitter resistance.

Based on the noise model in Fig.1, the voltages V_{tb} and V_{te} in Eq. (7) are obtained as

$$V_{tb} = V_1 + V_{t1} + V_{tbb'} + (I_{shb} + I_{fb})(R_1 + r_{bb'}) \tag{10}$$

$$V_{te} = V_2 + V_{t2} + (I_{shc} - I_{shb} - I_{fb})R_2 \ . \tag{11}$$

The equivalent noise input voltage V_{ni} can be expressed as a voltage in series with V_1 for CE stage and in series with V_2 for CB stage, respectively.

Substituting Eqs. (10) and (11) into Eq. (7) and factoring G_{mb} yields

$$I_{c(sc)} = G_{mb}\Big\{ V_1 + V_{t1} + V_{tbb'} + (I_{shb} + I_{fb})(R_1 + r_{bb'}) - \frac{G_{me}}{G_{mb}}\Big[V_2 + V_{t2}(I_{shc} - I_{shb} - I_{fb})R_2\Big] + \frac{I_{shc}}{G_{mb}} \Big\}. \tag{12}$$

The equivalent noise voltage in series with V_1 is given by all terms in brackets except the V_1 and V_2 terms, i.e. it can be reduced to

$$V_{ni} = V_{t1} + V_{tbb'} - V_{t2}\frac{r_o + r_e'/\alpha}{r_o - R_2/\beta} + (I_{shb} + I_{fb})\left[R_1 + r_{bb'} + R_2\frac{r_o + r_e'/\alpha}{r_o - R_2/\beta}\right] + I_{shc}\frac{r_o}{r_o - R_2/\beta}\left[\frac{R_1 + r_{bb'} + R_2}{\beta} + \frac{V_T}{I_C}\right] \tag{13}$$

where $V_T = kT/q$ is the thermal voltage.

To express V_{ni} as a voltage in series with V_2, Eq. (13) is multiplied by G_{mb}/G_{me}.

The mean-square value of V_{ni} is

$$v_{ni}^2 = 4kT\left[R_1 + r_{bb'} + R_2\left(\frac{r_o + r_e'/\alpha}{r_o - R_2/\beta}\right)^2\right]\Delta f + \left(2qI_B\Delta f + \frac{K_F I_B^{A_F}\Delta f}{f}\right)\left(R_1 + r_{bb'} + R_2\frac{r_o + r_e'/\alpha}{r_o - R_2/\beta}\right)^2 + 2qI_C\Delta f\left(\frac{r_o}{r_o - R_2/\beta}\right)^2\left(\frac{R_1 + r_{bb'} + R_2}{\beta} + \frac{V_T}{I_C}\right)^2 . \tag{14}$$

This expression gives the mean-square equivalent noise input voltage for the CE stage. To obtain v_{ni}^2 for the CB stage, the expression is multiplied by $(G_{mb}/G_{me})^2$. It follows from Eq. (14) that if $R_2 = 0$, v_{ni}^2 is independent of r_o.

Equation (14) can be simplified if it is assumed that $r_o >> R_2/\beta$ and $r_o >> r_e'/\alpha$, i.e. it is assumed the r_o approximations [3] hold. With these approximations Eq (14) can be written in the next form

$$v_{ni}^2 = 4kT(R_1 + r_{bb'} + R_2)\Delta f + \left(2qI_B\Delta f + \frac{K_F I_B^{A_F}\Delta f}{f}\right)(R_1 + r_{bb'} + R_2)^2 + 2qI_C\Delta f\left(\frac{R_1 + r_{bb'} + R_2}{\beta} + \frac{V_T}{I_C}\right)^2 . \tag{15}$$

This approximation applies to both the CE and the CB stages.

Two forms of the $V_n - I_n$ low - frequency noise models of the BJT are shown in Fig. 2.

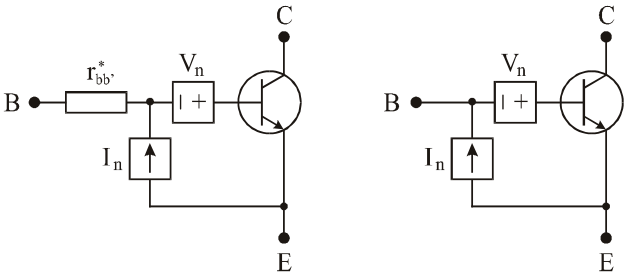

a) *b)*

Fig. 2. Low – frequency Vn - In BJT noise models

The model of Fig. 2 a) assumes that $r_{bb'}$ is an external resistor in series with the base. The asterisk indicates that $r_{bb'}$ is to be considered noiseless. The model of Fig. 2 b) assumes that $r_{bb'}$ is internal to the BJT.

To determine the values of V_n and I_n Eq. (13) is used for both models. Because V_{ni} given by this equation is the voltage in series with the base, R_1 must be considered to be the resistance of the signal source. In the $V_n - I_n$ model, the I_n noise source connects between signal ground and the input. Therefore, R_2 must be set to zero in the circuit to solve for I_n. Otherwise, R_2 would appear in the model and I_n would connect from the base to the lower node of R_2. In this case, Eq. (13) becomes

$$V_{ni} = V_{t1} + V_{tbb'} + \left(I_{shb} + I_{fb}\right)\left(R_1 + r_{bb'}\right) + I_{shc}\left(\frac{R_1 + r_{bb'}}{\beta} + \frac{V_T}{I_C}\right). \quad (16)$$

A. Analysis of the First Vn - In Model

For the first model Eq. (16) can be written in the form

$$V_{ni} = V_{ts} + V_n + I_n\left(R_s + r_{bb'}\right) \quad (17)$$

where $V_{ts} = V_{t1}$ and $R_s = R_1$.

It follows that V_n and I_n are given by

$$V_n = V_{tbb'} + I_{shc}\frac{V_T}{I_C} \quad (18)$$

$$I_n = I_{shb} + I_{fb} + \frac{I_{shc}}{\beta}. \quad (19)$$

Eqs. (18) and (19) can be converted into the next mean - square forms

$$v_n^2 = 4kTr_{bb'}\Delta f + 2kT\frac{V_T}{I_C}\Delta f \quad (20)$$

$$i_n^2 = 2qI_B\Delta f + \frac{K_F I_B^{A_F}\Delta f}{f} + 2q\frac{I_C}{\beta^2}\Delta f. \quad (21)$$

Because I_{shc} appears in the expressions for both V_n and I_n, the correlation coefficient is not zero and it is obtained as

$$c = \frac{2kT\Delta f}{\beta v_n i_n}. \quad (22)$$

B. Analysis of the Second Vn - In Model

For the second model Eq. (16) can be converted into the next form

$$V_{ni} = V_{ts} + V_n + I_n R_s. \quad (23)$$

V_{ts} and R_s are the same as in Eq. (17). Thus, the noise voltage V_n is

$$V_n = V_{tbb'} + \left(I_{shb} + I_{fb} + \frac{I_{shc}}{\beta}\right)r_{bb'} + I_{shc}\frac{V_T}{I_C} \quad (24)$$

and the noise current I_n is defined by Eq. (19).

The mean-square value of V_n is solved for as follows

$$v_n^2 = 4kTr_{bb'}\Delta f + \left(2qI_B\Delta f + \frac{K_F I_B^{A_F}\Delta f}{f}\right)r_{bb'}^2 + 2qI_C\Delta f\left(\frac{r_{bb'}}{\beta} + \frac{V_T}{I_C}\right)^2 \quad (25)$$

and the mean-square value of I_n noise source is identical with i_n^2 determined by Eq. (21).

It is clear that for the second form of $V_n - I_n$ model, I_{shb}, I_{fb} and I_{shc} appear in the expressions for both V_n and I_n. Therefore, the correlation between V_n and I_n exists. The correlation coefficient can be expressed as

$$c = \frac{1}{v_n i_n}\left[\left(2qI_B\Delta f + \frac{K_F I_B^{A_F}\Delta f}{f}\right)r_{bb'} + 2q\frac{I_C}{\beta}\Delta f\left(\frac{r_{bb'}}{\beta} + \frac{V_T}{I_C}\right)\right]. \quad (26)$$

III. Simulation Results

Using the above shown BJT models, the noise in a CE stage is simulated. The BJT is biased at $I_C = 1mA$ and $V_{CB} = 10V$. The small - signal parameters are $r_{bb'} = 40\Omega$, $\beta = 100$, $r_o = 40k\Omega$, $r_{b'e} = 2.5k\Omega$, $g_m = 0.04S$.

In Fig. 3 the effect of the frequency on the mean-square value of the noise voltage is presented. It can be concluded from the results that the thermal noise V_t and the shot noises V_{b1} and V_c are independent of frequency, while the flicker noise V_{b2} is inversely proportional to the frequency. It is clear from Fig. 3 that close to the frequency $f = 10Hz$ the

equivalent noise input voltage is almost coincides with low-frequency component and for $f > 1000Hz$ it coincides with the thermal component.

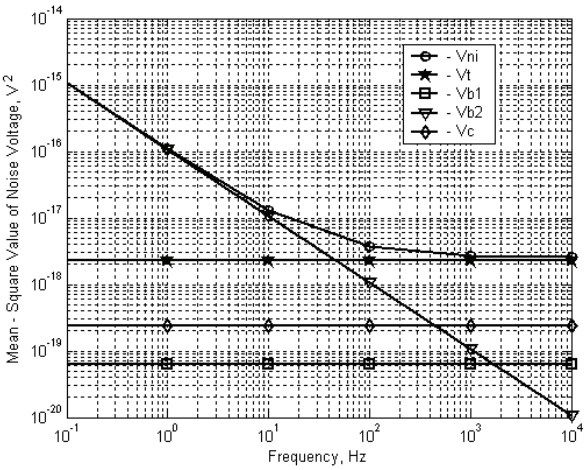

Fig. 3. Noise voltage as a function of frequency

The noise voltage change as a function of small-signal ac current gain is shown in Fig. 4. It follows from the results, that the β is not effected on the thermal noise. Although v_{ni}^2 decreases as β increases, the sensitivity is not that great for the range of β for most BJTs. Most BJTs have a β in the range $100 \le \beta \le 1000$. As β increases over this range, v_{ni}^2 decreases by 2.855dB. Superbeta transistors have a β in the range $1000 \le \beta \le 10000$. As β increases over this range, v_{ni}^2 decreases by only 0.345dB. Therefore, only a slight improvement in noise performance can be expected by using higher β BJTs, especially, when the transistor is biased at the optimum collector current.

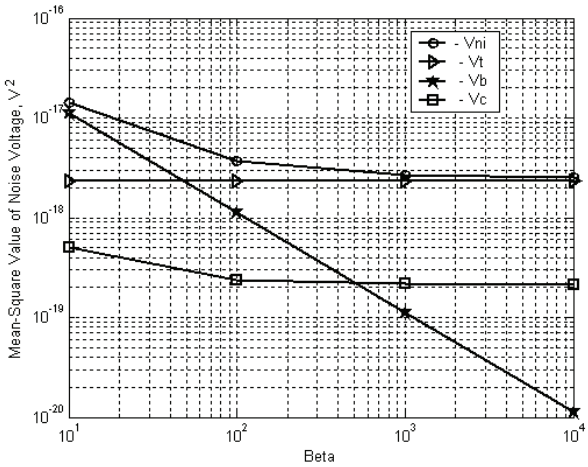

Fig. 4. Noise voltage change as a function of β

Fig. 5 demonstrates the simulated input noise voltage, as well, its components, as a function of the source resistance. It is clear that for very low values of R_s, the equivalent noise input voltage is principally due to the v_n noise. As resistance is increased, the noise is principally due to the flow of the i_n noise through R_s. For large R_s, the noise voltage is directly proportional to R_s.

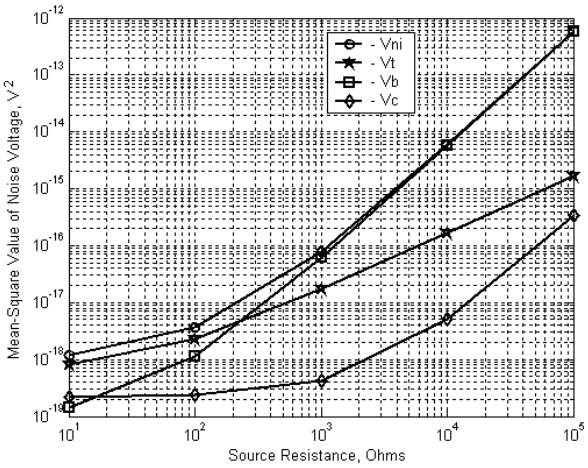

Fig. 5. Noise voltage components over different source resistances

The effect of the flicker noise coefficient on the input noise voltage is plotted in Fig. 6. The noise voltages relation for $K_F = 5.4x10^{-16}$ and $K_F = 0$ is 1.415 for $R_s = 1\Omega$, 10.545 for $R_s = 10k\Omega$, and 12.644 for $R_s = 100k\Omega$.

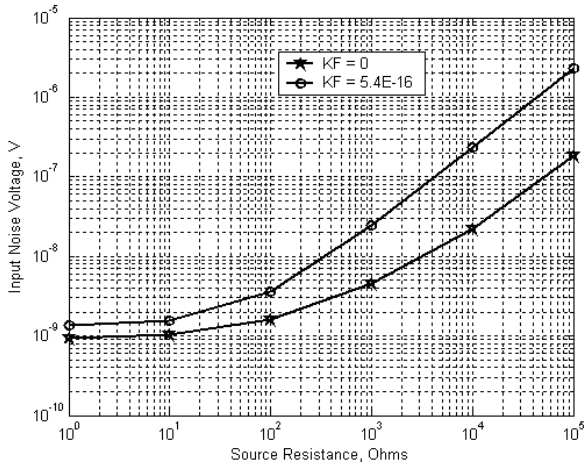

Fig. 6. Noise voltage as a function of source resistance and K_F

IV. Conclusion

An approach for BJT noise modelling and analysis at low frequencies is developed. Matlab simulation results support an availability of the approach proposed. The results allow a wide range of designers to analyze and to predict the effect of the BJT parameters, source resistance and frequency on the equivalent noise, as well, on the designing systems noise behavior.

References

[1] A. Van der Ziel, *Noise in Solid State Devices and Circuits*, John Wiley & Sons, Inc., New York, 1986. Noise Reduction

[2] Jieh -Tsorng Wu, *Noise Analysis and Modeling*, National Chiao -Tung University, 2001.

[3] *AC Analysis and Noise Analysis for Analog Circuits*, University of California, Berkeley, 2003.