Influence of Imperfect Carrier Signal Recovery on Detection of QPSK Signal using SC Technique in Rician Fading Channel

Zlatko J. Mitrović, Bojana Z. Nikolić, Goran T. Đorđević

***Abstract* - In this paper, the analysis of the reception of quadrature phase-shift keying (QPSK) signal in the Rician fading channel is presented. Selective combining (SC) and then demodulation and detection of the input signal are performed in the receiver while the estimation of the phase of received signal is not ideal. The bit error rate (BER) is obtained for arbitrary number of branches. The influence of non-ideal estimation of the phase of an input signal as well as the influence of the number of diversity branches to the dependence of average BER on average signal-to-noise ratio per bit in a channel is considered.**

***Keywords* - Diversity systems, Error probability, Phase-shift keying, Probability density function, Rician fading**

I. INTRODUCTION

In wireless communication systems, the variation of instantaneous value of the received signal, i.e. fading of the signal envelope is very common effect, due to the multipath propagation. Fading is one of the main causes of performance degradation in wireless communication systems [1-10].

Diversity technique is certainly one of the most frequently used methods for minimizing of fading effect and increasing the communication reliability without enlarging either transmitting power or bandwidth of the channel. The outline of this technique is that the same information is transmitted over few different non-correlated channels. In that way the influence of the fading onto each particular channel is independent. Signals from different channels are, then, combined in order to obtain the resulting signal. In that way the influence of the fading is mainly reduced. Particular diversity methods and combining techniques are presented in [1-10].

Selective combining (SC) is combining technique where the strongest signal is chosen among L branches of diversity system. The criterion for the selection of the branch is the largest value of instantaneous signal-to-noise ratio among the branches [1-3], [6], [7], [10].

Unlike in other combining techniques, a cophasing in the receiver is not required in SC technique, because, only one branch, one with the best characteristics in that precise moment, is chosen. Although SC technique brings the smallest improvement of receiver performances, the simplicity of practical realization makes the mentioned technique widely spreaded [1], [2], [6], [7]. That is the reason why all the calculations for receiver performances in this paper will be presented for SC technique at the reception.

The phase-locked loop (PLL) is used for carrier signal recovery from non-modulated signal in the receiver. As the receiver is not ideal, a certain phase error appears. The phase error is a difference between the phase of the incoming signal and the phase of the recovered carrier signal in the loop. It is a statistical process which has Tikhonov distribution [4], [5], [11].

In the following, the analysis of quadrature phase-shift keying (QPSK) signal detection in Rician fading channel is presented. Rician fading model is widely used for both outdoor cellular systems and indoor 800/900 MHz radio channels [8]. The selective combining of the signals from L branches is performed before the detection. The analysis is performed with the assumption that the carrier signal extraction is not ideal. The analytical expressions for probability density function (PDF) of the signal envelope are determined, as well as the expressions for the average bit error rate (BER) in detection. Using these expressions, the dependence of average BER on average signal-to-noise ratio per bit is obtained for different number of diversity branches L and different standard deviations of phase error σ_φ. Also the graphs which represent the dependence of average bit error probability on standard deviation of the phase error in the receiver, σ_φ, are shown for the case of QPSK signal detection.

II. MODEL OF THE SYSTEM

We shall initially introduce a transmitter which sends digitally phase-modulated signal with M levels (MPSK) in a form $A\cos(\omega_0 t+\Phi_0)$. For QPSK signal (M=4), depending on a sent symbol, Φ_0 can take following values from the set $\Phi_0 \in \{0, \frac{\pi}{2}, \pi, \frac{3\pi}{2}\}$. After the propagation through the fading channel, signal in k-th branch has the form (Fig. 1):

$$z_k(t) = r_k(t)\cos(\omega_0 t + \Phi_0 + \gamma_k(t)) + n_k(t), \qquad (1)$$

where $r_k(t)$ is the envelope of the received signal, ω_0 the angular frequency of the carrier, Φ_0 transmitted phase of the

Z. J. Mitrović, PD „HE Đerdap" d.o.o Kladovo, Trg Kralja Petra 1, 19320 Kladovo, Serbia; (e-mail: zlatko.mitrovic@djerdap.rs).

B. Z. Nikolić, Faculty of Electronic Engineering, Aleksandra Medvedeva 14, 18000 Niš, Serbia; (e-mail: bojananikol@gmail.com).

G. T. Đorđević, Faculty of Electronic Engineering, Aleksandra Medvedeva 14, 18000 Niš, Serbia; (e-mail: goran@elfak.ni.ac.yu).

signal, $\gamma_k(t)$ the random phase (the phase noise caused by multipath fading), and $n_k(t)$ is the additive white Gaussian noise in k -th diversity branch with zero mean value and variance σ^2. It is assumed that the noise power is same in every diversity branch and fading is uncorrelated among different branches.

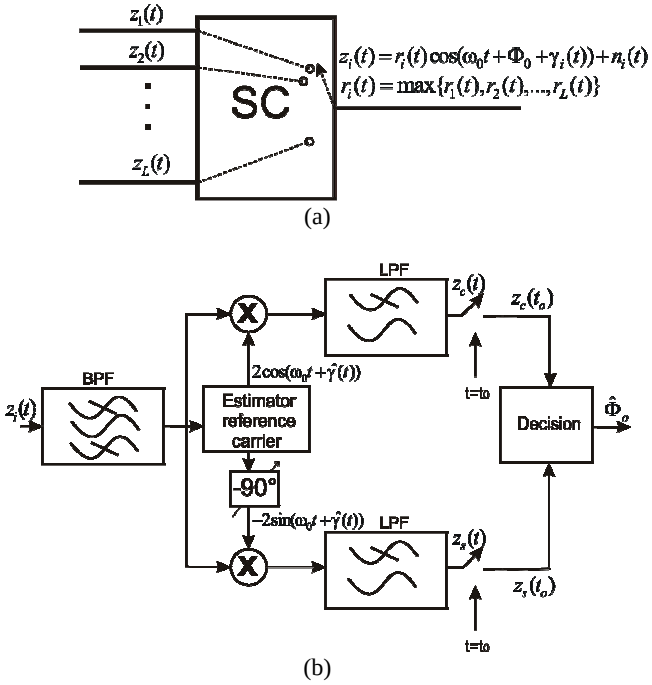

Fig. 1. (a) Selective combining and (b) signal detection of QPSK signals.

Regarding the above mentioned assumption, the chosen branch in the combining circuit is the one in which the envelope of the received signal has the largest value. As it is shown in Fig.1, the signal envelope at the output of the combining circuit is:

$$r_i(t) = \max\{r_1(t), r_2(t), ..., r_k(t), ..., r_L(t)\} . \qquad (2)$$

After the combining, signal is first led to the band-pass filter (BPF) with central frequency f_0. The filtered signal is then multiplied by the signal in phase and in quadrature from the estimator of reference carrier. This estimation is based on the filtered signal itself. Resulting signals are next led into the low-pass filters (LPF) and sampled in moments t=t_0. Finally, decision block determines, using signals from both branches, which phase of the signal is transmitted. As an output data, the calculated phase $\hat{\Phi}_0$ is obtained. The detector computes the metrics $|\Phi_0 - \psi_0|, \quad \Phi_0 \in \{0, \pi/2, \pi, 3\pi/2\}$, $\tan(\psi_0) = \dfrac{z_s(t_0)}{z_c(t_0)}$ and selects the Φ_0 that gives the minimum metric. Based on this phase $\hat{\Phi}_0$, the decision about the sent bits is made.

The purpose of the PLL is to estimate the phase of the incoming signal. In ideal case, the estimated phase should be equal to the phase of the incoming signal $\gamma_i(t)$. However, in practical realizations there is certain disagreement between the estimated phase $\hat{\gamma}(t)$ and the phase of the signal $\gamma_i(t)$. This disagreement is phase error and it is expressed as $\varphi(t) = \gamma_i(t) - \hat{\gamma}(t)$.

The PDF for this phase error corresponds to Tikhonov distribution [4], [5], [11]:

$$p_\varphi(\varphi) = \frac{e^{\alpha \cdot \cos\varphi}}{2\pi \cdot I_0(\alpha)}, \qquad -\pi \le \varphi < \pi \qquad (3)$$

where the parameter α represents the signal-to-noise ratio in the PLL circuit and gives the information about the preciseness of phase estimation of incoming signal. It can be assumed $\alpha = 1/\sigma_\varphi^2$, where σ_φ is a standard deviation of the phase error [4], [5], [11]. Modified Bessel function of the first kind and order zero is given as $I_0(\cdot)$.

The PDF of the signal envelope at the output of the combining circuit with L branches can be written as [3]:

$$p_{r_i}(r_i) = L \cdot p_r(r_i)\left(\int_0^{r_i} p_r(t)dt\right)^{L-1} . \qquad (4)$$

where $p_r(r)$ is the PDF of the signal envelope in k -th branch. Since the envelopes of the signals in these branches obey Rician distribution with same characteristics the expression (4) can be written as :

$$p_{r_i}(r_i) = L \cdot \frac{r_i}{\sigma_F^2} e^{-\frac{r_i^2 + A^2}{2\sigma_F^2}} I_0\left(\frac{A \cdot r_i}{\sigma_F^2}\right) \cdot \left(\int_0^{r_i} \frac{t}{\sigma_F^2} e^{-\frac{t^2 + A^2}{2\sigma_F^2}} I_0\left(\frac{A \cdot t}{\sigma_F^2}\right) dt\right)^{L-1} . \qquad (5)$$

After the classical analysis of the signal detection [9], [10], the expression for the conditional BER for QPSK signal, as a function of symbol signal-to-noise ratio in the channel $\rho_s^2 = \dfrac{r_i^2}{2\sigma^2}$, $\sigma^2 = \overline{n^2(t)}$ and phase error φ, can be presented as:

$$P_{e/\varphi,\rho_s^2} = \frac{1}{4}\left(\mathrm{erfc}\left(\sqrt{\frac{\rho_s^2}{2}}(\cos\varphi - \sin\varphi)\right) + \mathrm{erfc}\left(\sqrt{\frac{\rho_s^2}{2}}(\cos\varphi + \sin\varphi)\right)\right) \cdot \qquad (6)$$

The average BER is:

$$BER = \frac{1}{4}\int_{-\pi}^{\pi}\int_0^{\infty} \mathrm{erfc}\left(\sqrt{\frac{\rho_s^2}{2}}(\cos\varphi - \sin\varphi)\right) + \mathrm{erfc}\left(\sqrt{\frac{\rho_s^2}{2}}(\cos\varphi + \sin\varphi)\right)$$
$$\cdot L \frac{1+K}{\log_2 M \cdot \overline{\rho^2}} e^{-\frac{\rho_s^2(1+K)}{\log_2 M \cdot \overline{\rho^2}}} e^{-K} \cdot I_0\left(2\sqrt{\frac{K\rho_s^2(1+K)}{\log_2 M \cdot \overline{\rho^2}}}\right) \cdot \qquad (7)$$
$$\cdot \left(\int_0^{\sqrt{\frac{2\rho_s^2(1+K)}{\log_2 M \cdot \overline{\rho^2}}}} t \cdot e^{-\frac{t^2}{2} - K} I_0\left(\sqrt{2K} \cdot t\right) dt\right)^{L-1} \cdot \frac{e^{\alpha \cdot \cos\varphi}}{2\pi \cdot I_0(\alpha)} \cdot d(\rho_s^2) \cdot d\varphi ,$$

where it is $M = 4$ for QPSK signal, $\overline{\rho^2}$ is the bit signal-to-noise ratio, and $\log_2(\cdot)$ is the logarithm to base 2, K is the value of Rician parameter ($K = A^2 / 2\sigma_F^2$), erfc(·) is the complementary error function. As it is already known, for K=0 Rician fading becomes Rayleigh fading.

III. Numerical Results

Using (7), one can calculate average BER for Rician fading channel and discuss performances of the receiver for different values of Rician parameter K, standard deviation of phase noise σ_φ , as well as for different number of diversity branches L.

The influence of diversity order on the performances of the receiver can be observed from Fig. 2 where dependence of average BER on average signal-to-noise ratio per bit ($\overline{\rho^2}$) is shown for different values of parameter L . With the increase of the diversity order, performances of the receiver improve. However, larger number of diversity branches reduces the additional gain and increases the complexity of the system. Therefore, it is necessary to find a compromise between the performances of the system and its complexity. Power gain is the biggest when order of diversity system changes from $L = 1$ to $L = 2$. For example, in order to obtain the same values of BER= 10^{-4} , it is necessary for average signal-to-noise ratio to reach the value of $\overline{\rho^2} = 24$ dB for $L = 1$, $\overline{\rho^2} = 11{,}85$ dB for $L = 2$, $\overline{\rho^2} = 9{,}5$ dB for $L = 3$, $\overline{\rho^2} = 8{,}6$ dB for $L = 4$ and $\overline{\rho^2} = 8$ dB for $L = 5$. It can be noticed that the gain is reduced with the increase of the order of diversity system. In Table 1 calculated power gains are presented in dB.

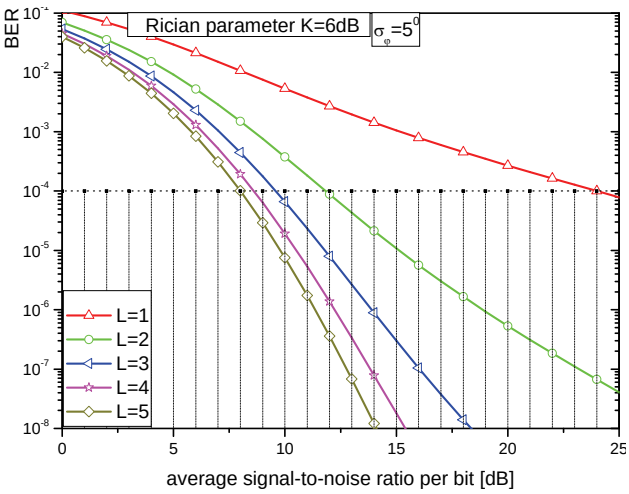

Fig. 2. Influence of the number of the branches L to the performances of the receiver.

TABLE I
GAIN OF THE AVERAGE BIT SIGNAL-TO-NOISE RATIO IN THE RECEIVER FOR CHANGE OF DIVERSITY SYSTEM ORDER, L
(FOR BER=10^{-4})

Crossing from lower to higher order of diversity system L	***gain*** $\overline{\rho^2}$
from L=1 to L=2	12,15 dB
from L=2 to L=3	2,35 dB
from L=3 to L=4	0,9 dB
from L=4 to L=5	0,6 dB

The influence of the carrier extractor quality (the increase of σ_φ) on the performances of QPSK receiver is presented in Fig. 3 for $L = 4$ and Rician parameter $K = 12$ dB. One can notice that for larger values of $\overline{\rho^2}$, the irreducible error floor (BER floor) appears. Therefore, no increase of $\overline{\rho^2}$ can cause the BER to fall under the certain value. It is because some of the received bits can be wrongly detected, due to the error in PLL, even when the power of additive Gaussian noise is approaching zero.

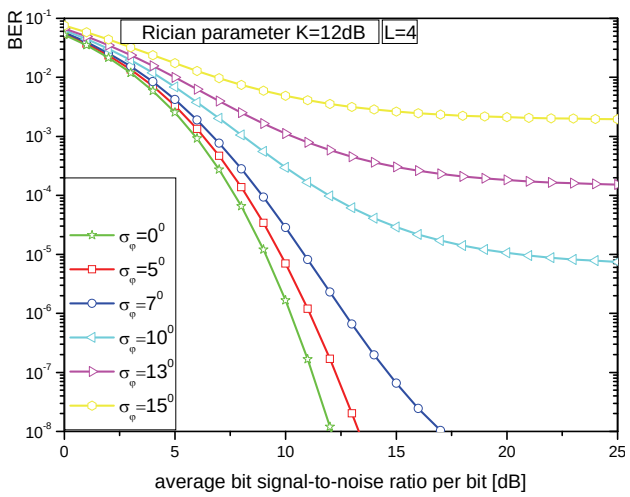

Fig. 3. Influence of the carrier extractor quality on the detection of QPSK signal with Rician fading for 4th order diversity systems.

Dependence of bit error probability on signal-to-noise ratio per bit is shown in Fig. 4 for different values of Rician parameter: $K = 0$ (Rayleigh fading), 4 dB and 12 dB. A significant influence of Rician parameter on the error probability can be noticed when $\overline{\rho^2}$ is in the range of values from 10 dB to 20 dB. The influence of Rician parameter K on the BER decreases for large values of $\overline{\rho^2}$. In this range, deviation of the phase error influences only the error probability. For large values of $\overline{\rho^2}$, all the curves become one. With further increasing of $\overline{\rho^2}$, the error probability stays constant and amounts to approximately $2{,}4 \cdot 10^{-10}$ (see Fig. 4). So, for the receiver which is designed to have standard

deviation of phase error 7° and uses SC technique with four diversity branches, the error probability can not be reduced to the value under $2{,}4 \cdot 10^{-10}$, for any value of other parameters. From Fig. 4 one can see that the biggest influence of the parameter *K* to the performances of the receiver exists for the value of the BER of around 10^{-7} .

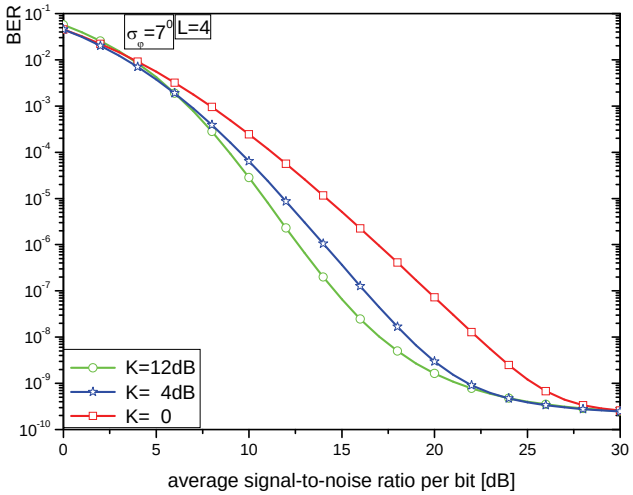

Fig. 4. Influence of Rician parameter *K* on the performances of the receiver.

The dependence of average BER on phase noise standard deviation is shown in Fig. 5, while the average signal-to-noise ratio per bit is used as a parameter. In Fig. 5 it can be seen that the curves of error probability dependence on phase noise standard deviation are approximately constant for the values less than $\sigma_\varphi = 3°$.

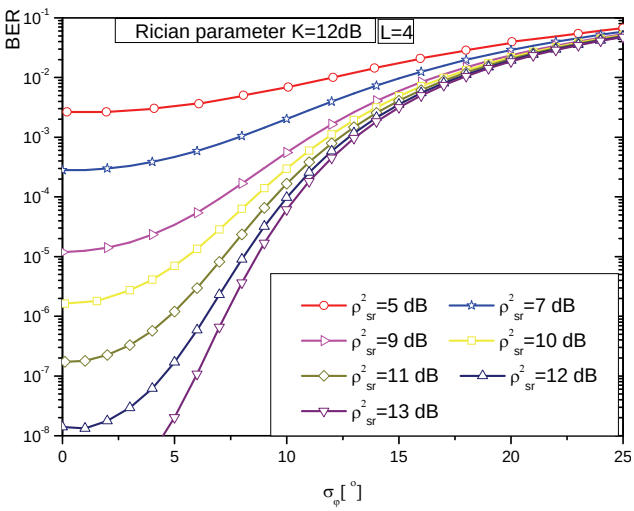

Fig. 5. Dependence of average BER on σ_φ for the QPSK receiver for different values of average signal-to-noise ratio. The order of the diversity system is 4 and $\overline{\rho^2}$ is marked as ρ_{sr}^2 .

IV. Conclusion

From the previously performed analysis of selective combining of QPSK signal in Rician fading channel, the BER is determined in the presence of the imperfect reference carrier extraction. On the basis of presented results it can be concluded in which measure standard deviation of the phase error has the influence on the performances of the receiver. It is shown that the stochastic phase error yields a BER floor. This BER floor is determined for different values of phase error standard deviation. Furthermore, the influence of number of diversity branches on the performances of the system was examined and it is established how much the value of the BER is reduced with the increase of the number of branches. Obtained results enable one to find a compromise between the efficiency (which is measured by the value of BER) and the complexity of the receiver (measured by the number of receiving antennas). More detailed comments on these results are presented in previous part of this paper.

References

[1] M. K. Simon, M. S. Alouini, *Digital Communication over Fading Channels: A Unified Approach to Performance Analysis*, John Wiley & Sons, Inc. 2000.

[2] J. D. Parsons, *The Mobile Radio Propagation Channel*, Second Edition, John Wiley & Sons Ltd 2000.

[3] Z. J. Mitrović, "Diversity Systems and Signal Detection by Receivers with Multiple Antennas," Diploma paper, Faculty of Electronic Engineering, Niš, August, 2007, (in Serbian).

[4] M. A. Najib, V. K. Prabhu, "Analysis of Equal-Gain Diversity with Partially Coherent Fading Signals," IEEE Transactions on Vehicular Technology, Vol. 49, No. 3, pp. 783-791, May 2000.

[5] N. C. Sagias, G. K. Karagiannidis, "Effects of Carrier Phase Error on EGC Receivers in Correlated Nakagami-m Fading," *IEEE Communications Letters*, Vol. 9, No. 7, pp. 580-582, July 2005.

[6] E. A. Neasmith, N. C. Beaulieu, "New Results on Selection Diversity," *IEEE Transactions on Communications*, Vol. 46, No. 5, pp. 695-704, May 1998.

[7] Q. T. Zhang, H. G. Lu, "A General Analytical Approach to Multi-Branch Selection Combining Over Various Spatially Correlated Fading Channels," *IEEE Transactions on Communications*, Vol. 50, No. 7, pp. 1066-1073, July 2002.

[8] J. Sun, I. S. Reed, "Performance of MDPSK, MPSK, and Noncoherent MFSK in Wireless Rician Fading Channels," *IEEE Transactions on Communications*, Vol. 47, No. 6, pp. 813-816, June 1999.

[9] D. Drajić, *Introduction to Statistical Telecommunication Theory* Akademska misao, Belgrade, 2003, (in Serbian).

[10] J. G. Proakis, *Digital Communications*, McGraw-Hill, New York, 2000.

[11] W. C. Lindsey, M. K. Simon, *Telecommunication Systems Engineering*, Prentice-Hall, Inc., Englewood Clifs, NJ, 1973.