Dynamic compensation of the gyroscope bias offset

Rosen Miletiev [1], Radostin Kenov[2], Ivaylo Simeonov [3], Emil Iontchev [4]

Abstract - **The paper discusses the dynamic compensation of the gyroscope bias offset based on the calculation of the pitch, roll and yaw by the Kalman filter and the electronic compass. The compensation is based on the error from the comparison of the integrated gyroscope Z axis data and electronic compass data for the heading angle calculation. The compensation is very important if the magnetic field data are lost or there are magnetic disturbances caused by soft-iron or hard-iron effects. The experiments are accomplished to proof the gyroscope bias offset compensation ability of the system.**

Keywords **- inertial navigation, kalman filter**

I. Introduction

MEMS sensors allow the implementation of a lot of different functions, as free-fall detection, car navigation, map browsing, gaming, menu scrolling, motion control, vibration monitoring and many other applications. The integration of the inertial data defines the most important problem of this navigation system – an unlimited error accumulation [1]. Typical factors, which have influence on the inertial sensor accuracy may be described as follows – null offset (bias), temperature hysteresis, gyroscope sensitivity to the linear accelerations, sampling noise, non – orthogonal sensor axes, etc. [2,3]. The additive error leads to the unlimited error accumulation due to the data integration. The bias offset is the main source of integration errors in IMU systems when velocity and distance are calculated on the bases of the accelerometer and gyroscope data. In the most of cases these errors may be grow rapidly if the bias offset is not be compensated. But the bias offset depends from the temperature, supply voltage, chip statistics, etc. Therefore the bias offset could not be compensated by a static value, measured at the IMU system start.

The system experiments are accomplished and the inertial data are processed via Kalman Filter to calculate the vehicle pitch and roll values which are used in the electronic compass to calculate the yaw (heading) angle. The results from the inertial navigation are compared with GPS data.

[1]Rosen Miletiev is with the Faculty of Telecommunications at Technical University of Sofia, 8 Kl. Ohridski Blvd, Sofia 1000, Bulgaria. E-mail: miletiev@tu-sofia.bg

[2]Radostin Kenov is with the Faculty of Telecommunications at Technical University of Sofia, 8 Kl. Ohridski Blvd, Sofia 1000, Bulgaria. E-mail: rkenov@hotmail.com

[3]Ivaylo Simeonov is with the Faculty of Computer Systems and Control at Technical University of Sofia, 8 Kl. Ohridski Blvd, Sofia 1000, Bulgaria, E-mail: ivosim@abv.bg

[4]Emil Iontchev is with the Higher School of Transport "T. Kableshkov" 158 Geo Milev Street, Sofia 1574, Bulgaria, E-mail: e_iontchev@yahoo.com

II. System description

The system block diagram is shown at Figure 1. It consists of the following main blocks used in the experiments:

- IMU system – 9DoF system, consists of 3D linear accelerometer, 3D gyroscope and 3D magnetometer, which are integrated in the single IMU unit from Analog Devices (ADIS16405). This IMU system has a capability to measure the inertial and magnetic data up to 819Hz. The microcontroller read the data from the IMU system via SPI interface (MSSP2 module)
- MMC/SD card – The additional flash memory up to 2GB is used to record the inertial, navigation and magnetic data. The microcontroller read/write the data from/to the MMC/SD card via SPI interface (MSSP1 module).

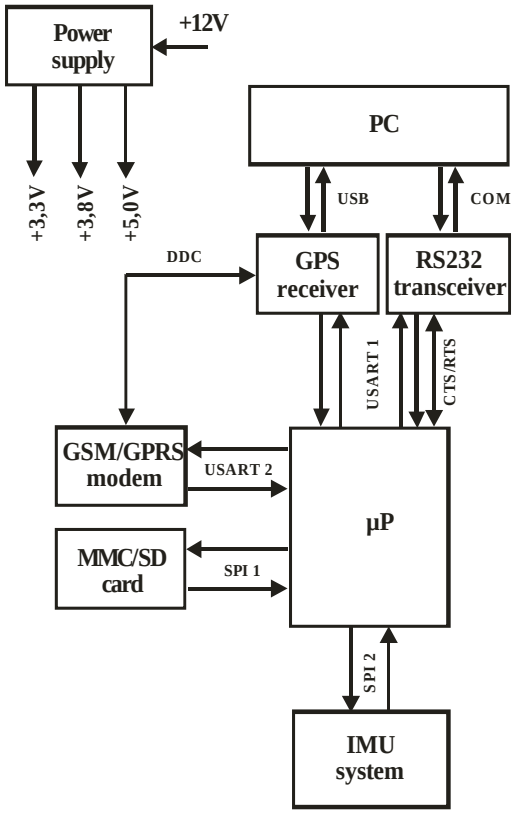

Figure 1. System block diagram

- GPS receiver – The navigation data are obtained by the GPS/GNSS module (LEA 6S) produces by Swiss-based ublox. This module has been designed for low power consumption, low costs and UART, USB and DDC (I^2C compliant) interfaces. The GPS receiver is capable to update the navigation data up to 10Hz.

- GSM/GPRS modem is used to send the navigation and inertial data to the database server at a real-time. It is based on the quadband GSM (LEON G100) produced by the same company due to the simple integration of u-blox GPS and A-GPS and quad-band GSM/GPRS, class 10.
- Microcontroller – The 8-bit high performance RISC PIC18 microcontroller is used to read the navigation and inertial data and to control the external devices according to their position. The PIC18 microcontrollers are optimized for C programming and have advanced peripherals (SPI/I²C™, UARTs, PWMs, 10-bit ADC, CAN, etc.).

The sampling frequency of the inertial data is limited to 240Hz due to the limited time to send data to PC via RS232 interface. This sampling frequency is also chosen because the inertial blocks from 40 frames are stored in the single block of MMC/SD card and the sampling frequency have to be multiple to 40Hz.

The inertial data are read by the navigation processor, which use an EKF to calculate pitch and roll angles (Figure 2). The obtained results are used in the tilt-compensated compass to calculate the yaw angle. In the same time the gyroscope data are numerically integrated using trapezoidal rule to calculate the yaw angle (heading) of the moving object according to the equations [4]:

$$\begin{aligned} \varphi_x(i) &= \varphi_x(i-1) + \frac{\omega_x(i) - \omega_x(i-1)}{2}\Delta t \\ \varphi_y(i) &= \varphi_y(i-1) + \frac{\omega_y(i) - \omega_y(i-1)}{2}\Delta t \\ \varphi_z(i) &= \varphi_z(i-1) + \frac{\omega_z(i) - \omega_z(i-1)}{2}\Delta t \end{aligned} \qquad (1)$$

The tilt-compensated compass calculated the heading angle according to the equations [5]:

$$\begin{aligned} X_H &= M_X \cos\phi + M_Y \sin\phi \sin\theta - M_Z \cos\theta \sin\phi \\ Y_H &= M_Y \cos\theta + M_Z \sin\theta \\ \varphi_0 &= arctg\left(\frac{Y_H}{M_H}\right) \\ \varphi &= \varphi_0 + \varphi_{declination} \end{aligned} \quad , \quad (2)$$

where $\phi - pitch, \theta - roll$.

The declination angle for Sofia (Bulgaria) is equal to +4°20′ [6]. The 3D magnetometer is also preliminary calibrated towards soft-iron and iron-iron effects according to the algorithm described at [7].

The signal processing algorithm for the dynamic compensation of the null bias is based on the comparison of the integrated gyroscope data and the output data of the Kalman Filter (Figure 3). The X and Y bias offsets are compensated in similar way but the feedback is connected respectively with roll and pitch signal from the Kalman Filter output.

The comparison error is fed to smoothed filter (median filter, 61-th order) which removes the high frequency components before the differentiator block. The corrected gyroscope data are fed into the Kalman filter.

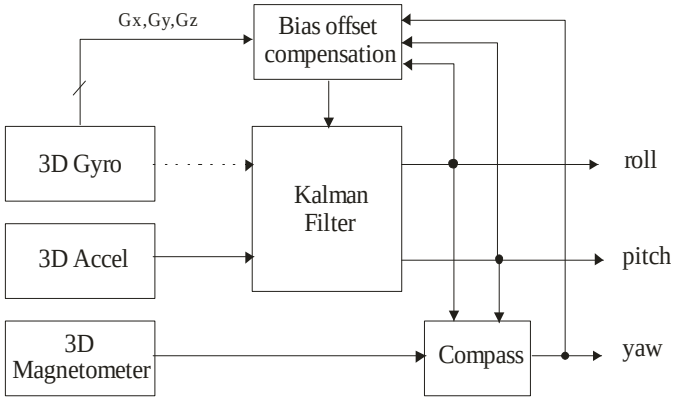

Figure 2. Block diagram of dynamic compensation of the null offset

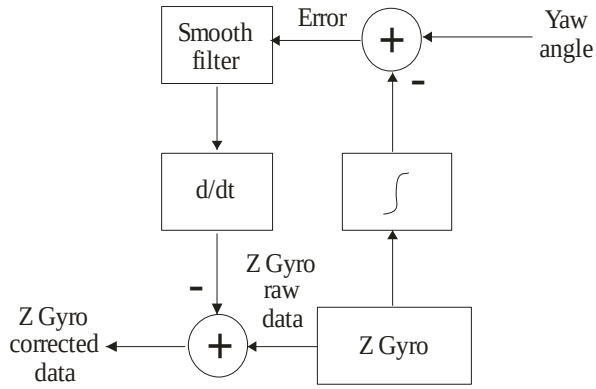

Figure 3. Null compensation algorithm

III. EXPERIMENTAL DATA AND ANALYSIS

The dynamic compensation of the gyroscope null offset is tested on the road and the data are recorded on MMC/SD card and processed by MATLAB routine. The recorder track is shown at Figure 4. The selected course is passed three times to compare the long-time results.

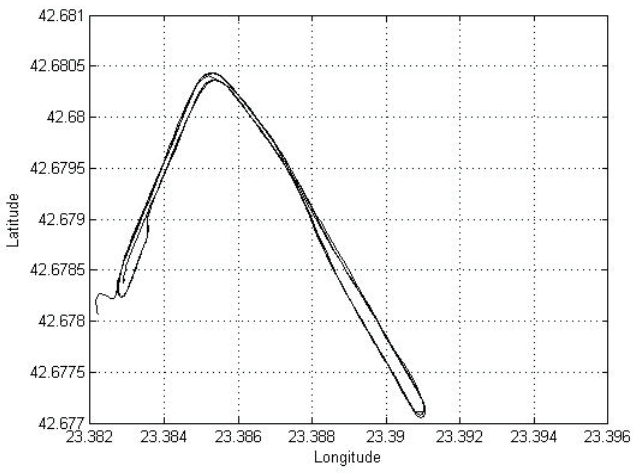

Figure 4. Experimental track (GPS data)

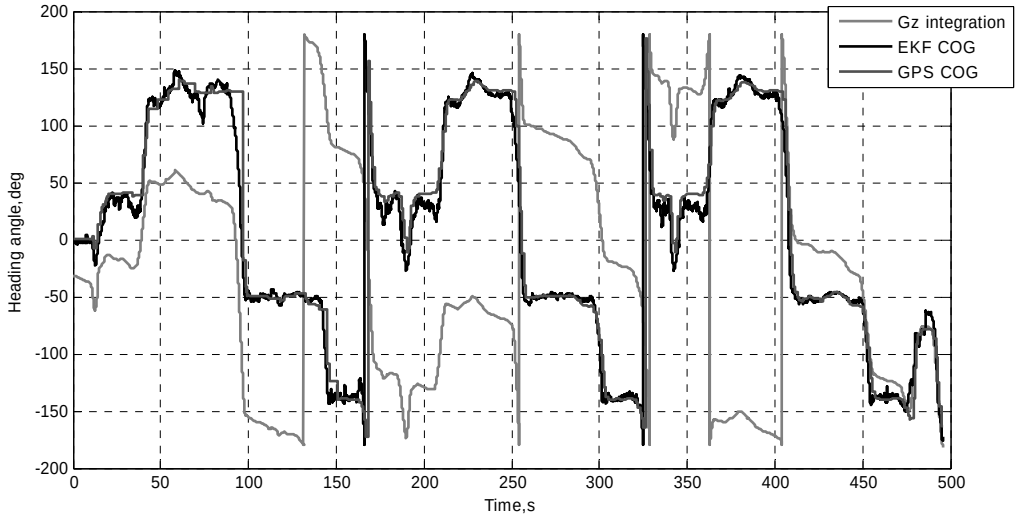

Figure 5. Heading angle from GPS data, EKF and Z gyro integration without bias compensation

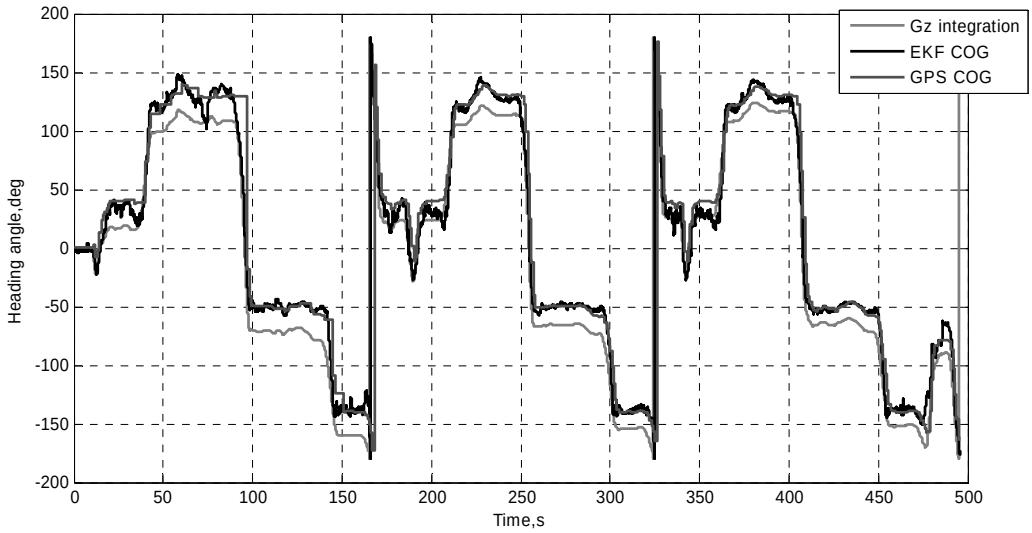

Figure 6. Heading angle from GPS data, EKF and Z gyro integration with static bias compensation

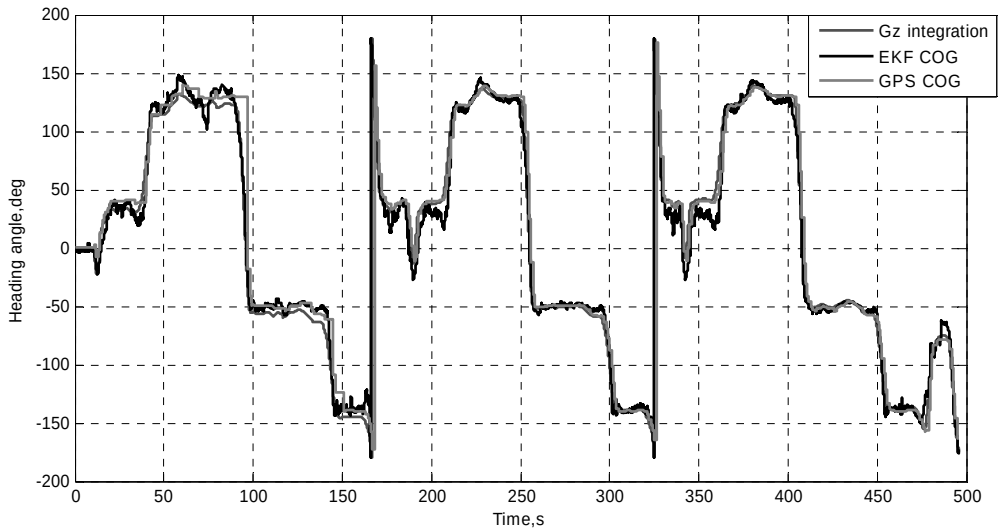

Figure 7. Heading angle from GPS data, EKF and Z gyro integration with dynamic bias compensation

The system is placed between the front seats in the passenger car near the vehicle mass center and the IMU axes are orientated towards the vehicle axes according as follows:

- X – parallel with the longitudinal axis
- Y – parallel with the cross section axis
- Z – parallel with the vertical axis.

The experimental and processed data results are shown at Figure 5, Figure 6 and Figure 7.

The raw (non-compensated) Z gyroscope data are integrated and the light grey line at Figure 5 shows the huge difference between the calculated heading angle and GPS COG (Course over ground) data and EKF COG values. The update rate of the GPS data is equal to 1Hz and the stepped COG form is clearly visible. In the same time the inertial data are updated with 240Hz rate and the EKF heading data produce a high resolution picture of the motion.

The static bias offset compensation also gives an inaccurate heading angle (Figure 6). The static compensation is accomplished by averaging of the first 1200 samples (5 seconds) when the system is fixed. The error between the real and the calculated heading angle from the gyroscope data also varies in the time, because the bias offset depends mainly from time, temperature and supply voltage, so the ADIS16405 has a built-in Gyroscope Automatic Bias Null Calibration [8].

The results from the dynamic bias offset compensation are shown at Figure 7. It is clearly visible the accurate data from the gyroscope integration data – the difference between the GPS COG data (dark grey line), EKF output heading angle (black line) and gyroscope heading angle (light grey line) does not exceed 2°. Simultaneously the static compensation produces up to 20° heading error and the integration of the non-compensated data are totally degraded in comparison with the GPS COG and EKF output data.

The experiments show that this accuracy remains unaffected during all test period of 10 minutes while the static compensation could be used up to 5 minutes.

IV. Conclusions

The paper represents the dynamic compensation of the null bias of the MEMS gyroscopes. It is shown that the proposed compensation produces up to 2° heading error while the static one may compensate the error for a limited period of time and the heading error shows a cumulative disposition in the time.

The proposed algorithm could be implemented in the 8-bit microcontrollers because the Kalman filter calculations may be significantly simplified and the used smoothed filter is based on the sorting process which does not require additional calculations.

The IMU system may be used for inertial navigation based on the EKF (Extended Kalman filter) due to the high sampling frequency and small integration errors, gaming, motion control, gyro stabilized platforms, MVEDR (Motor Vehicle Event Data Recorder) systems or crash monitor for aircrafts, trains or cars.

Acknowledgement

This paper was prepared and supported by the National Fund under contract number No.DTK02/2-2009.

References

[1] Grewal M.S., Weil L.R., Andrews A.P., Global Positioning Systems, Inertial navigation, and Integration, John Willey & Sons, Inc., 2001

[2] Parkins B. W., Spilker J. J., Eds., Global Positioning System: Theory and Applications. Washington, DC: Amer. Inst. Aeronautics Astronautics, 1996, vol. II.

[3] Walchko K. J., Low Cost Inertial Navigation: Learning To Integrate Noise And Find Your Way, A Master Of Science Thesis, University Of Florida, 2002

[4] Martin Arraigada, Manfred Partl - Calculation of displacements of measured accelerations, analysis of two accelerometers and application in road engineering, 6th Swiss Transport Research Conference, Monte Verità / Ascona, March 15 – 17, 2006

[5] Chris Valenti,Microchip Technology Inc.AN996 - Designing a Digital Compass Using the PIC18F2520 microcontroller, 2005

[6] http://magnetic-declination.com/

[7] Thomas Stork,Philips Semiconductors, AN00022 - Electronic Compass Design using KMZ51 and KMZ52, 2000

[8] ADIS 16405 datasheet - http://www.analog.com/static/imported-files/data_sheets/ADIS16405.pdf