Experimental study on availability of FSO system under a heavy snowfall

Nikolay Kolev[1] and Tsvetan Mitsev[2]

Abstract – **There is developed FSO system designed for experimental approbation of it dependencies from meteorological conditions. In working terms there is a proofs of it work. Experimental dependencies for BER are compared with the theoretical dependence BER(S_M), build on the base of offered mathematical model.**

Keywords – **Free Space Optics, Bit Error Rate, Visibility**

I. INTRODUCTION

Over the past two decades, optical wireless communication systems have become quite popular as an alternative to wireless radio networks. As advantage of the technology can be figure out wide bandwidth, relatively rapid development of the communication channel, licence free technology, small dimensions and weight. Besides the advantages this technology also have disandvantages. Rain, fog, snow can block the transmission of information in optical wireless communication channel. These factors could cause greater attenuation of optical signal in comparison with the radio signal. Optical wireless communication systems offer high speed point to point communication.

This technology can provide high data rate transfer, it can be easily installed, moved or reconfigured as needs change.

Free space optics is extremely secure because of high directivity of the optical beam. This is a technology that combines the speed of fiber optics and flexibility of wireless radio communications. In wireless optical technology we have light propagation in free space for data transmission between two points. It is communication that uses modulated optical pulses. Each optical transceiver consists of source of light and optical detector. The optical beam is focused by collimators. Because of the advantages of the optical wireless communication systems as compared to existing technologies, it is the most practical option for higher speed, respectively wider bandwidth [1,2].

Because of this we are constantly looking for ways to overcome limitations, of weather conditions, on wireless optical communication systems.

There are a lot of research teams around the world whose work is focuses on experimental approbation of such systems in order to improve them. Most often approbation are associated with the study of addiction on the weather conditions like snow, fog, rain on their basic parameters, as level of received signal, bit error rate, operating wavelength. There is also studies relating to the length of the optical path and so on.

In [3,4] is presented method for real time measurement of visibility for wireless optical communication system.

There is a comparison between few infrared working wavelengths. Three side by side parallel links are build, operating at 780nm, 1550nm and 9100um. The optical parameters of transceivers (aperture of receivers and transmitters, distance) are the same. The receive power is affected only by channel meteorological conditions at each wavelength. From reported results it is clear that mid infrared window is better than other ones in dense and thick fog conditions. The authors' shows graphics fig.3 [5] of normalized optical power vs. visibility which indicates that 9100nm optical link is better than 1550nm and 780nm for visibility from 60m to 2000m.

In this paper we will show our experimental setup for bit error rate measurement for free space optics communication systems. The kit is equipped with meteorological station, pseudo random noise generator, personal computer, communication system, digital oscilloscope.

II. THEORY

For verifying the performance of developed in TU-Sofia FSO system, see paragraph III, an experiments in real conditions is necessary to be conducted. This suggests selecting such parameters of the system and the communication channel which allow working of the system with BER in reasonable limits, for example BER [10^{-8}-10^{-9}]. It is better these limits to be comparable to the respective typical change of weather conditions. Selecting appropriate parameters can be done by performing an energy balance. It is known [7,8] that in Gaussian amplitude distribution of the field in the radiating aperture the power of laser radiation in the plane of the receiving aperture can be calculated by the expression.

$$\Phi_z(z) = \iint_{\pi\rho_z^2} I(\rho,z).dA = \iint_{\pi\rho_z^2} I(0,z) I_n(\rho,z) dA \qquad (1)$$

In the upper expression $I(\rho,z)$ is the decomposed intensity distribution $I_n\ (\rho,z)$ normalized intensity of the directional diagram and ρ_z is the current radius of the laser beam. The radius ρ_z e function of the starting radius of the laser beam ρ_0 (in the aperture of the transmitting antenna), of the central wavelength λ_0, of the correction factor K_θ considering the

Nikolay Kolev[1] is with the Faculty of Telecommunications at Technical University of Sofia, 8 Kl. Ohridski Blvd, Sofia 1000, Bulgaria, E-mail: kolev@tu-sofia.bg.

Tzvetan Mitzev[2] is with the Faculty of Telecommunications at Technical University of Sofia, 8 Kl. Ohridski Blvd, Sofia 1000, Bulgaria.

real diffraction divergence of the radiation of a Gaussian laser beam and of the length of the communication channel Z.

$$\rho_z(z) = \sqrt{1 + \left(\frac{K_\theta \lambda z}{\pi \rho_0}\right)^2} \quad (2)$$

By assumption that:

$$\rho_z << R_r \quad (3)$$

R_r is the radius of receiving aperture , after reduction of the expression in (1) [6,7] for intensity of the optical beam in the center of receiving aperture we have.

$$I(0,z) = \frac{2\tau_t \tau_a \Phi_t}{\pi \rho_z^2(z)} \quad (4)$$

In the expression for $I(0,z)$, τ_t is the transmittance of the transmitting antenna. The power of optical radiation in the aperture of transmitting antenna Φ_t is connected with the transmittance of the transmitting antenna τ_t and the power of the source of optical radiation Φ_L.

$$\Phi_t = \tau_t \Phi_L \quad (5)$$

The transparency of the communication channel τ_a in homogenous atmosphere, which is typical for horizontal communication channel, can be calculated by

$$\tau_a = e^{-\alpha_e z} \quad (6)$$

The extinction of the communication channel α_e can be calculated by expression:

$$\alpha_e[km^{-1}] = \frac{3.32}{S_M[km]}\left(\frac{\lambda[\mu m]}{0.55}\right)^{-585\sqrt[3]{S_M[Km]}} \quad (7)$$

In (7) S_M is the visibility. The optical power in the input of the photo detector, PIN photodiode, considering (3) is

$$\Phi_{PD}(z) = \tau_r A_r I(0,z) \quad (8)$$

where τ_r и A_r are respectively the transmittance and the area of receiving optical antenna. Finally for calculation of SNR ratio at the output of the receiver we have the expression:

$$SNR(z) = \frac{R_I \Phi_{PD}}{\sqrt{2\left\{2K_B T\left(\frac{1}{R} + \frac{1}{R_{Fb}}\right)A + eR_I\left[\Phi_{PD} + \Phi_B\right]\right\}\Delta f}}$$

In (9) accounting existence of background optical radiation Φ_B, which depends of τ_r, $L_{\lambda,B}$ - spectral intensity of background radiation, $2\theta_r$ - plane angle of the diagram directional reception, R_R - radius of receiving aperture, $\Delta\lambda_F$ - spectral band of transmittance of the receiver.

$$\Phi_B = \pi^2 \tau_r L_{\lambda,B} \theta_r^2 R_R^2 \Delta\lambda_F \quad (10)$$

In calculations for integral sensitivity of the receiver.

$$R_I = \frac{\eta e \lambda}{hc} \quad (11)$$

where η is a quantum efficiency of the photo detector, e - charge of the electron, h is a Planck's constant, c is speed of light. In (9) K_B is Boltzmann constant, T is absolute temperature, R and R_{Fb} are resistances in trance impedance amplifier, which is part of the optical receiver, A is coefficient which account the additional noise from preamplifier. There is connection between the bandwidth of the receiver Δf and throughput of the related channel.

$$\Delta f = \frac{C_I}{2} \quad (12)$$

Approximate calculation of the bit error rate based on (9) can be done according to next formula (13). It is valid in case that SNR >6.

$$BER = 13 * 10^3 e^{-2.5SNR} \quad (13)$$

III. HARDWARE DESIGN

Fig.1 shows a simplified block scheme of experimental setup for free space optics BER testing. It consists of communication system, CPLD board, microprocessor board, personal computer, meteorological station. The system is installed between block 2 and block 3 of Technical University of Sofia at distance of 300m. It operates at speed of 10Mbps with 680nm wavelength. The system use LED's for light source. Beam divergence of the system can be set between 2-5 mrad. For optical receiver we use Hamamatsu Si PIN photodiode. For our experiments we use pseudo random bit sequence which is generated by CoolRunnerII CPLD chip.

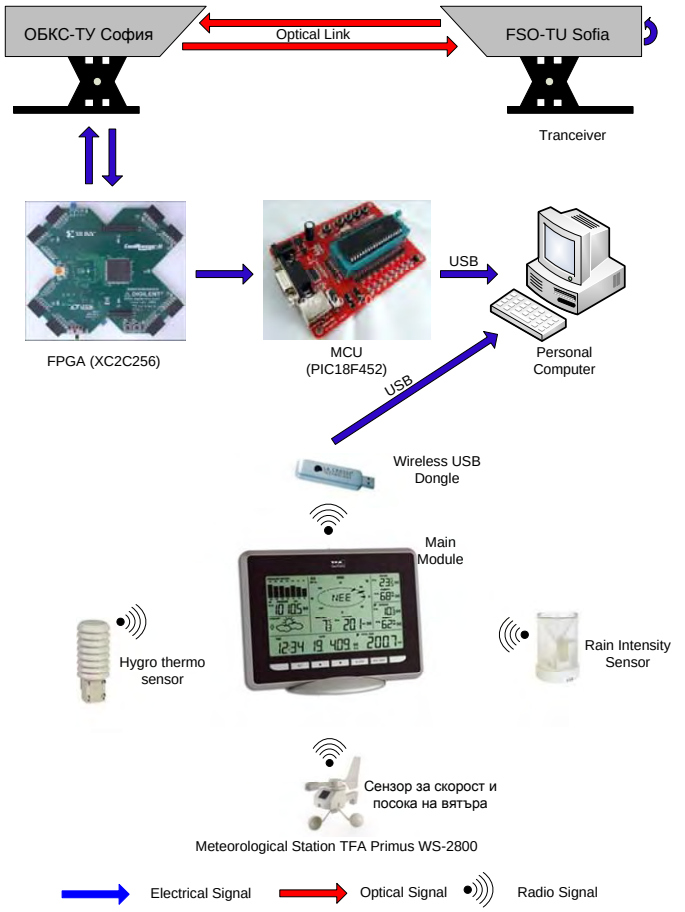

Fig.1 Simplified block scheme of experimental setup for free space optics BER testing

The output of the generator is connected to the wireless optical communication system. The information passes through the atmosphere channel, which is looped back, and enters back to the CPLD chip.

It performs a few parallel operations fig.2. Besides generation of pseudo random bit sequence it detects errors and makes time compensation. Time compensation is necessary because of different time traveling in the different channels. The first one is interconnection link inside the CPLD chip and the second one is the atmosphere channel. Time compensation is done by delay lines realized by logic components in the CPLD chip. The generation of pseudo random noise signal lay on so called "linear feedback shift register" principle [5]. Schematically it is N level shift register with XOR feedback. His input condition is a linear function of its previous state. The information is shifted on every tick of the clock generator from left to right, and last but one and last digit are connected to both inputs of the logical element XOR. After completion the logical operation result is returned to the first digit of the shift registry, etc.

The period of repetition depends on number of shift register stages. The formula used for calculating the period of repetition is (1)

$$N=2^n-1 \qquad (13)$$

, where N is period of repetition, n is number of stages of shift register. In the real scheme our shift register have We chose to build the generator with D type flip flops in the CPLD IC because there is not a single chip shift register inside. The real schemes consist of 36 stages shift register, which provides 68719476735 period of repetition by formula (13).

In details operation of the experimental kit consists of sending pseudo-random sequence of bits over optical wireless communication channel. The information is fed to comparing device which compares all received and transmitted bits at every tick of clock signal. In case that we have difference between the two signals the FPGA chip produce special signal for mistake. For the correct operation of this block it is necessary and existence of the clock signal, as shown in the scheme Fig.2.

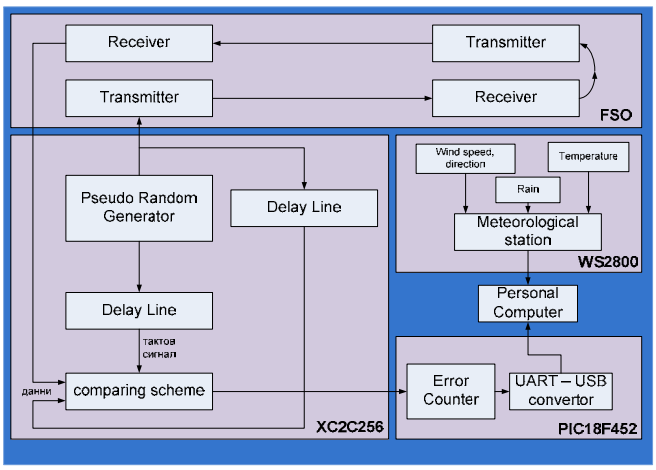

Fig.2 Detailed scheme of experimental setup for free space optics BER testing

The next block of the scheme is the counter of mistaken bits, which increment his register when receive special signal for error from comparing device. The counter is realized by 8-bit PIC microprocessor PIC18F452 which operate at 10MHz clock frequency. The information of the counter is transmitted through UART-USB converter to the Computer. There is standard UART-USB converter connected to MCU USART port, pins RC6/TX, RC7/RX which takes the signal to the USB port of the computer. The information for mistaken bits is send at every second with three consecutive bits. Personal computer collects also meteorological data from meteorological station Primus WS-2800 fig.1 for wind speed, wind direction, rain intensity, outdoor temperature, air humidity. The weather station is installed on the roof of the block 2 nearby one of the FSO transceiver. The station communicates wirelessly with all sensors and PC. It works with specialized software "Heavy Weather Pro WS2800" which records the data from all sensors in file. Fig3 shows real pictures of FSO system installed in TU Sofia.

Fig.3 Real pictures of FSO system

IV. EXPERIMENTAL AND NUMERICAL RESULTS

The mathematical model offered in paragraph II can be used for configuration of the FSO system (paragraph III), so it works at limit of BER=10^{-3}-10^{-8} in case of good visibility. This makes the system too sensitive even by small changes of meteorological conditions in rain or snow. For example at a fixed length of the communication channel z=0.36km, some of the parameters of the system like ρ_0 and Φ_t can be configured that at S_M=20km (visibility which corresponds to clear atmosphere according to International visibility codes for weather conditions and precipitation [Heinz Willebrand and Baksheesh Ghumoch, FSO, SAMS Publishing_2002])
we should have BER=10^{-8}. To meet the given criteria the system of TU Sofia work with these parameters: Z=0.36Km, λ_0=0.68µm, ρ_0=0.35cm K_θ=100, S_M=20km, τ_t=0.5,Φ_L=3.3mW, R_r=5cm, τ_r=0.5, ή(λ_0)=0.86, C_i=10Mbps, $L_{\lambda,B}$=10^{-2}W/m^{2}srÀ, θ_r=5mrad, R=100KΩ, $\Delta\lambda_{IF}$=400nm, T=300K, R_{Fb}=0.5kΩ, A=10. At these parameters one of the channels of the system (in simplex mode) will work with BER=2.10^{-8}. The second channel is configured with big power reserve, so in heavy meteorological conditions it transmit information without error. In case that we have heavy meteorological conditions theoretical dependence BER(S_M) can be seen at fig. 4

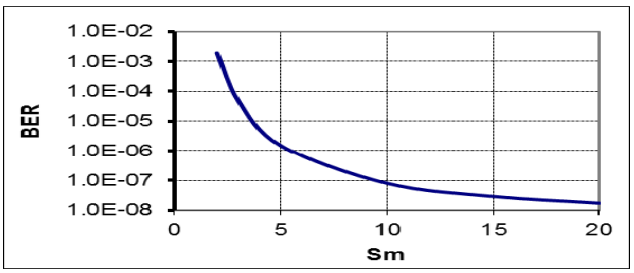

Fig.4 Theoretical dependence BER(S_M)

Experimental approbation of the system is conducted in time interval November 2012 – March 2013. At fig. 5 can be seen one of the experimental dependencies for BER(t). The measuring is for time approximation of 1s, which correspond to BERmin=10^{-7}

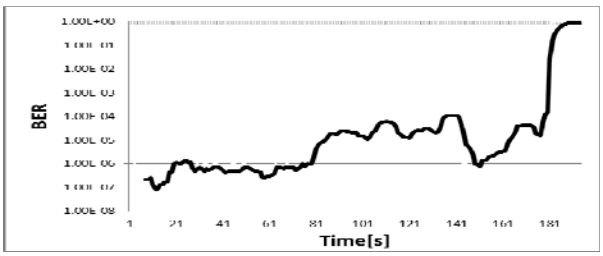

Fig.5 experimental dependencies for BER(t)

It shows the dynamics of appearance of snowfall, which according to Table of International visibility codes correspond to S_M 10Km to 1Km. The process occurs for approximately 2-3min.

CONCLUSION

In this work we present mathematical model for FSO parameter calculation for specific whether conditions at predefined BER. With developed in TU-Sofia system we conduct experimental approbation in weak and medium snowfall. Obtained experimental results confirm the performance of the used model. Experimentally taken dependence fig.5 confirms the expectations predicted by the mathematical model BER(S_M) fig.4 In the future we plan to develop more precise mathematical model for comparison of experimental with mathematical results.

ACKNOWLEDGEMENT

The research described in this paper is supplied by the Bulgarian National Science Fund Under the contract
№ ДДВУ02/74/2010

REFERENCES

[1] H. Willebrand, S. Ghuman, “Free-Space Optics: Enabling Optical Connectivity in Today's Networks”, Indianapolis, Indiana 46240 USA, Sams Publishing, 2002
[2] Henniger H., O. Wilfert “An Introduction to Free-space Optical Communications”
[3] C.P. Colvero, M.C.R. Cordeiro, “Real-time measurements of visibility and transmission in far-, mid- and near-IR freespace optical links.
[4] C. P. Colvero, M. C. R. Cordeiro “Experimental comparison between far- and near-infrared wavelengths in free-space optical systems”
[5] Kolev, N. , K. Dimitrov, J. Velchev, T. Mitsev, “Experimental setup for BER measuring of Free space optics system”, ICEST’2011, Nis, Serbia 2011
[6] Bonev B. Influence of Random Fluctuations of laser beam Propagation Direction on FSO Power Design
[7] Ferdinandov E., B. Pachedjieva , B. Bonev. Sl. Saparev Joint influence of heterogeneous stochastic factors on bit-error rate of ground-to-ground fre-space laser communication systems
[8] Ts.Mitsev, K. Dimitrov, Hr. Ivanov, N. Kolev, “Optimum divergence of laser radiation in FSO systems” , CEMA’12, Conference Proceedings, pp.42-42, Athens, Greece, 2012.