# Two-way Doherty amplifier – asymmetry analysis and linearization

Aleksandar Atanasković[1], Kurt Blau[2], Nataša Maleš-Ilić[3], Aleksandra Đorić[4]

*Abstract:* **The linearization effects on asymmetrical two-way Doherty amplifiers are presented in this paper. The linearization approach uses the second harmonics and fourth-order nonlinear signals of the fundamental signals, which are extracted at the output of the peaking cell, adjusted in amplitude and phase and injected at the input and output of the carrier cell of the Doherty amplifier. An asymmetrical Doherty amplifier with the additional circuit for linearization has been realized and measurements of the linearization influence on the third-order intermodulation products have been carried out.**

*Keywords*: **Doherty amplifier, linearization, second harmonics and fourth-order nonlinear signals, intermodulation products**

## I. Introduction

Future transmitter design in wireless systems (CDMA2000, W-CDMA, OFDM etc.) needs to support various modulation formats, a diversity of signal bandwidth and frequency ranges. Combining with the requirements for good linearity and high power efficiency in modern communication standards characterized with high data rate and spectral efficiency, the linearization techniques for nonlinear microwave power amplifiers have gained significant interest. The Doherty amplifier has proven to be one of the most attractive among various techniques for efficiency enhancement. The results of nonlinear distortions suppression in efficient mode Doherty amplifier by applying different linearization methods have been reported: post-distortion-compensation [1], the feedforward linearization technique [2], the predistortion linearization technique [3] and combination of those two linearization techniques [4].

[1]Aleksandar Atanasković is with the Faculty of Electronic Engineering, University of Niš, Serbia, Aleksandra Medvedeva 14, 18000 Niš, Serbia, E-mail: aleksandar.atanaskovic@elfak.ni.ac.rs

[2]Kurt Blau is with the RF & Microwave Research Laboratory, Ilmenau University of Technology, P.O. Box 100 565, 98684 Ilmenau, Germany, E-mail: kurt.blau@tu-ilmenau.de

[3]Nataša Maleš-Ilić is with the Faculty of Electronic Engineering, University of Niš, Serbia, Aleksandra Medvedeva 14, 18000 Niš, Serbia, E-mail: natasa.males.ilic@elfak.ni.ac.rs

[4]Aleksandra Đorić is with the Innovation centre of advanced technology Niš, Serbia, Vojvode Mišića 58, 18000 Niš, Serbia, E-mail: alexdjoric@yahoo.com

The linearization effects of the fundamental signals' second harmonics (IM2) and fourth-order nonlinear signals (IM4) at frequencies that are close to the second harmonics to the standard (two-way, three-way and three-stage) Doherty amplifiers were investigated in [5] and [6] through the simulation process. We applied the approach where IM2 and IM4 signals are injected together with the fundamental signals into the carrier amplifier input and put at its output [7]. Additionally, the influence of IM2 and IM4 signals on Doherty amplifier linearity was verified experimentally on standard symmetrical two-way Doherty amplifier [8], [9].

In this paper, the linearity of two-way Doherty amplifier was analyzed for different signal asymmetry in the carrier and peaking cells. The influence of the second harmonics and fourth-order nonlinear signals which are generated at the output of the peaking cell on the linearization of the third-order intermodulation products has been considered. The signals for linearization are tuned in amplitude and phase through the linearization branches and run at the carrier amplifier input and output over the frequency diplexers. Additionally, this paper presents an experimental verification of the linearization effects on a realized asymmetrical two-way Doherty amplifier with the additional circuit for linearization.

## II. Linearization Technique

Theoretical analysis of the linearization approach that uses the second harmonics and fourth-order nonlinear signals (IM2 and IM4) for linearization has been given in [5], and [7]. According to this, it is possible to reduce spectral re-growth caused by the third-order distortion of fundamental signal by choosing the appropriate amplitude and phase of IM2 and IM4 signals injected at the input and output of the amplifier.

The IM2 and IM4 signals generated at the output of the peaking amplifier are extracted through the frequency diplexer circuit in the configuration depicted in [5]. It separates the fundamental signals and signals for linearization (IM2 and IM4 signals) that are optimally matched to the impedance for their adequate power level. The IM2 and IM4 signals are tuned in amplitude and phase by the amplifier and phase shifter over two independent linearization paths. They are inserted at the carrier amplifier input and output over the frequency diplexers designed with the independent matching circuits for the fundamental and signals for linearization. This configuration provides the linearization of Doherty amplifier by the simultaneous injection of IM2 and IM4 signals at the input and output of the carrier amplifier.

## III. Design and Simulation

Agilent Advanced Design System-ADS software has been used for the design of a two-way Doherty amplifier. Its schematic diagram is shown in Fig. 1. An attenuator placed in front of the carrier cell in the Doherty amplifier makes differences between the symmetrical (without attenuator) and asymmetrical (with attenuator) Doherty amplifier.

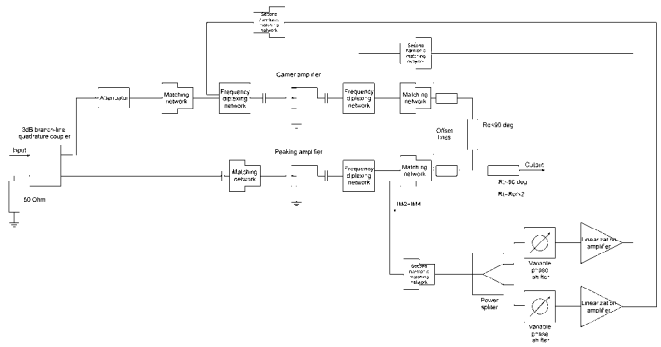


Fig. 1. Schematic diagram of two-way asymmetrical Doherty amplifier with additional circuit for linearization

A two-way Doherty amplifier was designed in the standard configuration [1], [2], [4], [5]. The input and output matching circuits of amplifying cells transform the input impedance of the device to 50Ω and the optimum load impedance $Z_{OPT}$ to 50Ω, [10]. The output combining network is also in a standard configuration consisting of a quarter-wave impedance transformer with the characteristic impedance $R_o = 50\Omega$ and a quarter-wave transmission line with the characteristic impedance $R_t = R_o\sqrt{2}$ [11]. The phase difference of 90° is required at the inputs of the carrier and peaking amplifier to compensate for the phase discrepancy caused by the quarter-wave impedance transformer at the outputs of those two amplifiers.

In a low-power region the impedance seen at the output of the peaking transistor is transformed to an open by the output matching circuit and the proper offset line [10]. In order to compensate for the phase distortion in the Doherty amplifier an appropriated offset line is adjusted at the output of the carrier amplifier. The diplexer at the input and output of the carrier cell and the output of the peaking cell filters the fundamental signals and signals for linearization at the frequencies around the second harmonics.

In order to produce more power from both cells of Doherty amplifier and more linear operation according to the analysis of uneven power drive [11], we have examined the linearity of the asymmetrical two-way Doherty amplifier. The test for two-tones at frequencies at 899MHz and 900MHz has been carried out. We considered the third-order intermodulation products in terms of the fundamental signal output power for the following cases: no attenuation in the carrier amplifier cell, and with an attenuation of 1dB, 2dB, 3dB and 4dB. Fig. 2 includes averaging power of IM3 products at 898MHz (IM3-) and 901MHz (IM3+) for the denoted attenuations. In higher power range, IM3 products exhibit a falling power if the carrier amplifier is driven with attenuated signals in reference to the peaking cell. It should be pointed out that the amplifier drain efficiency obtained in simulation is retained almost equal in all analyzed cases.

The asymmetrical amplifier with 2dB attenuation is considered as the most appropriate for power levels greater than 16dBm due to significantly lower power of IM3 than in cases of 0dB and 1dB attenuation. Additionally, IM3 products of the Doherty with 2dB asymmetry are below IM3 products in cases of 3dB and 4dB attenuation for output power around 16dBm. For higher power levels, IM3 products are almost equal for the considered cases.

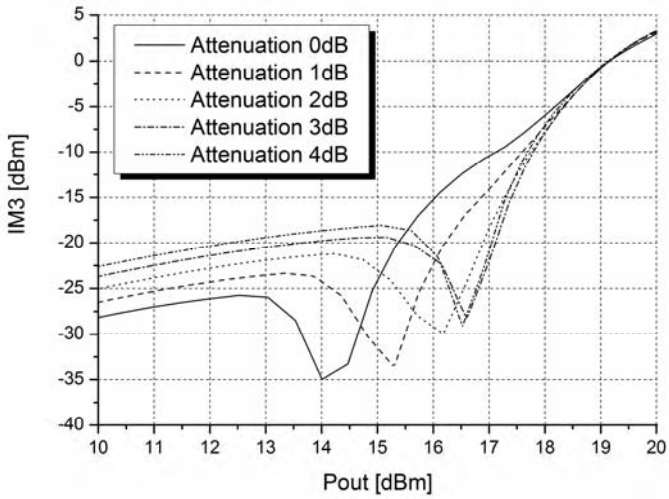


Fig. 2 Simulated third-order intermodulation products before linearization of symmetrical (attenuation: 0 dB ) and asymmetrical (attenuation: 1dB, 2dB, 3dB and 4dB) two-way Doherty amplifier in a power range

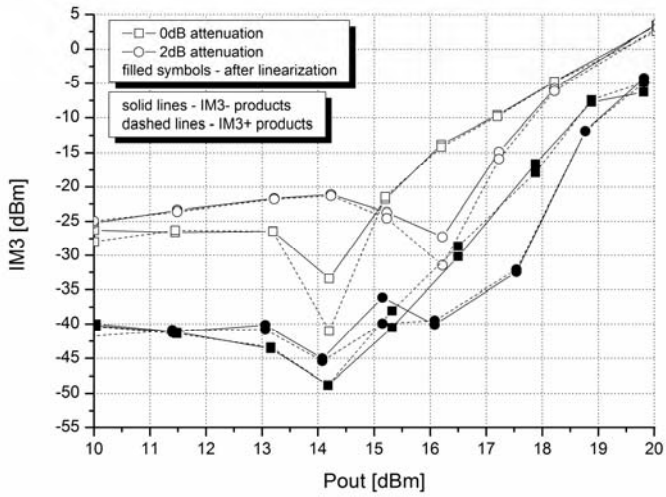


Fig. 3 Simulated third-order intermodulation products before and after linearization of symmetrical (0dB attenuation) and asymmetrical (2dB attenuation) two-way Doherty amplifier in a power range

The effects of the applied linearization method on the asymmetrical two-way Doherty amplifier (2dB attenuation) have been observed through the simulation process by using two-tone test at the frequencies 899MHz and 900MHz. Third-order intermodulation products (IM3- and IM3+) before and after linearization are presented in Fig. 3 for 10dBm to 20dBm output power. These results are compared to the symmetrical Doherty amplifier. Before linearization, the IM3 products of asymmetrical Doherty are larger than products for symmetrical amplifier in power levels lower than 15dBm, while they descent below symmetrical amplifier IM3 products in higher power range. Also, it is noticeable that proposed linearization method achieves about 15dB improvement of IM3 products in case of asymmetrical amplifier, which provides a better linearity in almost entire power range than the symmetrical amplifier can accomplish.

## IV. Realization of Amplifier and Linearization Circuits

The resistive Pi attenuator is placed in front of the carrier cell of the Doherty amplifier to achieve asymmetry in amplifier design. The peaking cell is driven by a signal with 2dB more power regarding of the carrier amplifier according to the analysis performed in this paper. The attenuator was projected as a matched device which requires exact values of 11.61Ω for a serial resistor and 436.21Ω for shunt resistors. The resistors from the standard E24 resistor series are around the desired ones, 12Ω for the serial resistor and 430Ω for the shunt resistors, were used to realize the attenuator that is characterized by VSWR=1.003 and attenuation of 2.06dB.

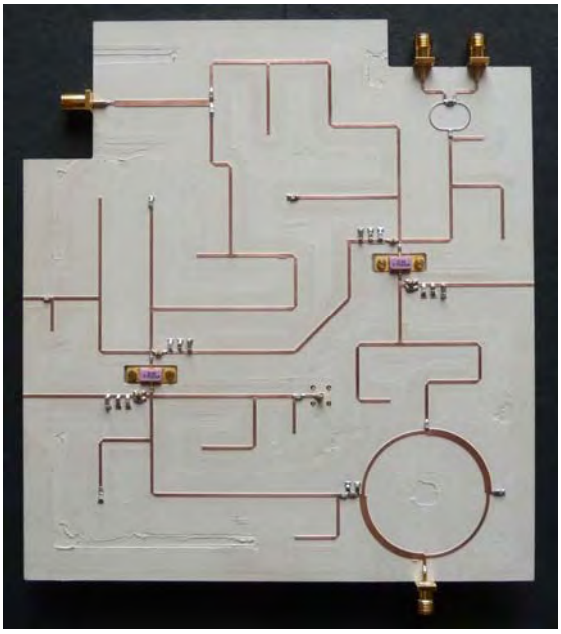

Fig. 4 Realized asymmetrical two-way Doherty amplifier

The carrier and peaking cells in the asymmetrical Doherty amplifier (Fig. 4.) were designed by using AP602A-2 GaAs MESFET. The matching impedances for source and load at 0.9GHz for the carrier cell are $Z_S = (17.5 + j90.1)\Omega$ and $Z_L = (53.1 + j28.8)\Omega$, respectively, whereas for the peaking cell $Z_S = (101.4 + j175.8)\Omega$ and $Z_L = (72.8 + j122.7)\Omega$. The matching impedances for the second harmonics at 1.8GHz for source and load are $Z_S = (15.0 + j44.8)\Omega$ and $Z_L = (48.1 + j30.2)\Omega$, respectively. All these impedances were obtained by using load-pull and source-pull analysis in ADS.

The carrier amplifier is biased in class-AB configuration ($V_D = 5\text{V}$, $V_G = -3.2\text{V}$), and the peaking amplifier operates in class-C regime ($V_D = 5\text{V}$, $V_G = -5.8\text{V}$).

The linearization circuit (Fig. 5.) comprises M/A-COM Quad PIN diode variable attenuator MA4P7455-1225, Mini-Circuits 180° voltage variable phase shifters JSPHS-23+, as well as an inserted semi rigid cable with appropriate length to enable phase shift more than 180°. Additionally, the linearization circuit includes a cascaded amplifying chain consisting of a high linear ERA-5SM+ Mini Circuit amplifier and amplifier with AP602A-2 GaAs MESFET designed for application at second harmonic frequencies. The linearization circuit adjusts IM2 and IM4 signals in amplitude and phase before they are fed at the carrier amplifier input and output over the frequency diplexers. The linearization branch can vary power of the signals for linearization from -12dB to 18dB in reference to the generation point at the peaking amplifier output.

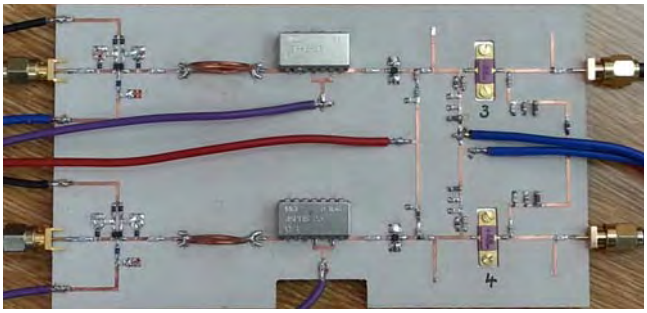

Fig. 5. Realized linearization circuit

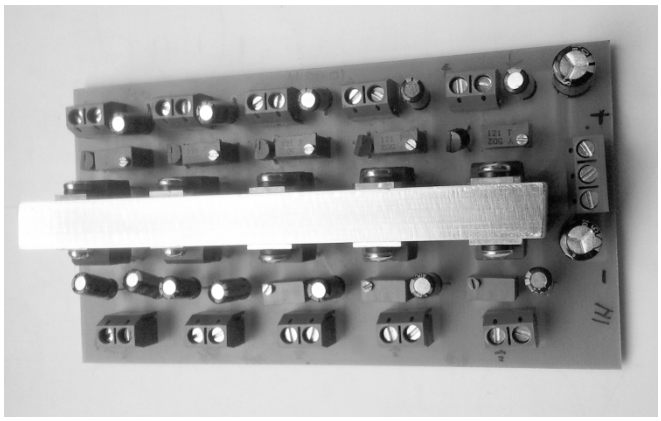

Fig. 6. Realized circuit for DC bias

The asymmetrical Doherty amplifier was fabricated on Rogers 3010 substrate with 1.6mm thickness and 17μm metallization layer. With the intention of reducing the required number of laboratory DC power supplies, the separate integrated circuit, which includes ten independent DC bias outputs (Fig. 6), was realized by using standard voltage regulators. Five DC outputs are positive adjustable (from 0V to 15V), three are negative adjustable (from -1.2V to -8V) and two are fixed DC voltages (+12V and +5V). The required inputs are $+20V_{DC}$ and $-10V_{DC}$.

*Measured Results*

Measured output spectrum of the asymmetrical Doherty amplifier before and after applying linearization for two sinusoidal signals at the frequencies 900MHz and 901MHz are compared in Fig. 7. Fundamental signal output power is about 11.6dBm before and 10.9dBm after linearization. Third-order intermodulation products at the frequencies 899MHz

and 902MHz are lessened by linearization from -3.75dBm to -14.6dBm.

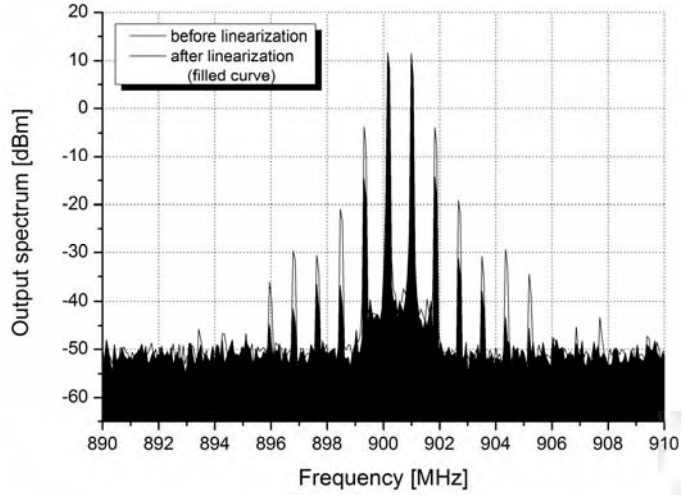


Fig. 7. Measured output spectrum for 3dBm input power of fundamental signals before and after linearization

Even though the intermodulation products of higher order included into the output spectrum were not considered in this paper, it should be observed that they are also suppressed. The analysis of the proposed linearization technique influence on fifth-order intermodulation products of the asymmetrical Doherty amplifier will be a subject of further research.

## V. Conclusion

This paper presents the verification of the linearization of the asymmetrical two-way Doherty amplifier by the simultaneous injection of the second harmonics and fourth-order nonlinear signals (IM2 and IM4) at the input and output of the carrier amplifier. The analysis of linearization effects of an asymmetrical Doherty amplifier has been carried out through the simulation for different attenuation in carrier amplifier cell and compared with the symmetrical Doherty amplifier. Additionally, the linearization results for the asymmetrical Doherty amplifier have been confirmed experimentally. The linearization approach provides a significant downtrend of the third-order intermodulation products, even for a wider power range. Moreover, the achieved results are better than in case of symmetrical amplifier, especially for a higher power. Additionally, it should be pointed out that the approach used for the Doherty amplifier linearization utilizes the peaking amplifier as a source of the signals for linearization. This possibility of Doherty amplifier topology represents an advantage in the linearization process due to simplified circuit complexity and reduced total energy consumption.

**Acknowledgement**: *This work was supported by the Ministry of Education, Science and Technological development of Republic of Serbia, the project number TR-32052.*

## VI. References

[1] K. J. Chao, W. J. Kim, J. H. Kim and S. P. Stapleton, “Linearity optimization of a high power Doherty amplifier based on post-distortion compensation”, *IEEE Microwave and Wireless Components Letters*, vol.15, no.11, pp.748-750, 2005.

[2] K. J. Cho, J. H. Kim and S. P. Stapleton, “A highly efficient Doherty feedforward linear power amplifier for W-CDMA base-station applications”, *IEEE Trans., Microwave Theory Tech*., vol. 53, no. 1, pp.292-300, 2005.

[3] B. Shin, J. Cha, J. Kim, Y. Y. Woo, J. Yi, B. Kim , “Linear power amplifier based on 3-way Doherty amplifier with predistorter”, *IEEE MTT-S Int. Microw. Symp. Digest*, pp.2027-2030, 2004.

[4] T. Ogawa, T, Iwasaki, H. Maruyama, K. Horiguchy, M. Nakayama, Y. Ikeda and H. Kurebayashi, “High efficiency feed-forward amplifier using RF predistortion linearizer and the modified Doherty amplifier”, *IEEE MTT-S Int. Microw. Symp. Digest*, pp.537-540, 2004.

[5] A. Atanasković, N. Maleš-Ilić, B. Milovanović, “The linearization of Doherty amplifier”, *Microwave review*, No.1, Vol. 14, pp.25-34, September 2008.

[6] Aleksandar Atanasković, Nataša Maleš-Ilić, Bratislav Milovanović: “The linearization of high-efficiency three-way Doherty amplifier”, *TELFOR2008, Conference Proceedings on CD*, 3.17, Beograd, Srbija, 25-27. Novembar, 2008.

[7] A. Atanasković, N. Maleš-Ilić, B. Milovanović, “The suppression of intermodulation products in multichannel amplifiers close to saturation”, *Proceedings of 11th WSEAS International Conference on Circuits*, pp. 198-201, Greece, July 2007.

[8] A. Atanasković, N. Maleš-Ilić: “Poboljšanje linearnosti two-way doherty pojačavača korišćenjem nelinearnih produkata drugog i četvrtog reda“, *Elektronski zbornik radova 55 konferencije ETRAN 2011 na CD-u*, MT3.1, Banja Vručica (Teslić), Bosnia and Herzegovina (in Serbian)

[9] A. Atanasković, N. Maleš-Ilić, B. Milovanović: "Linearization of two-way Doherty amplifier", *EuMIC 2011-The 6th European Microwave Integrated Circuits Conference, European Microwave Week 2011 Conference Proceedings on CD*, Manchester, UK, October 10-11, EuMA 2011, pp.304-307, 2011.

[10] Y.Yang, J. Cha, B. Shin, and B. Kim, “A Fully Matched N-way Doherty Amplifier with Optimized Linearity”, *IEEE Trans., Microwave Theory Tech*., vol.51, no. 3, pp. 986-993, 2003.

[11] J. Kim, J. Cha, I. Kim, and B. Kim, “Optimum operation of asymmetrical-cells-based linear Doherty power amplifiers-uneven power drive and power matching“, *IEEE Trans., Microwave Theory Tech*., vol. 53, no. 5, pp. 1802-1809, 2005.