Probabilistic Assessment of the Impact of Renewable Energy Sources on the Power Flows of Medium Voltage Grids

Nikolay Nikolaev[1]

Abstract – **Due to known reasons the small-scale wind turbines and photovoltaic installations are connected to the medium voltage grids. Their increasing share in these grids makes relevant the problem with the impact of the renewables on the steady-state and the transient processes. There are a lots of developed algorithms which are intended to assess the uncertainty of the renewable energy sources on the power flows of the electrical grids. This paper proposes novel and easy to implement algorithm which is based on the generation and calculation of random number of steady states, by using the Monte Carlo method. The main advantage of the new algorithm over the algorithms known from the literature is that in requires a minimum initial data. The obtained results allow the user to quickly estimate the impact of the generators based on renewable energy sources on the loading of the power lines and transformers, as well as the impact on the voltage level in the grid. The algorithm is realized and tested in a computer program developed by the author. Test case results from a medium voltage grid are presented. The obtained results prove the application of the algorithm for such studies.**

Keywords – **probabilistic power flow, overloading, wind generator, Monte Carlo method, renewable energy sources**

I. INTRODUCTION

The evolution of the electric power systems (EPS) over the last decade is mainly associated with massive investments in renewable energy generation projects. A significant part the built wind and solar power plants are connected to medium voltage grids (distribution grids). As it is well known, these grids supply the domestic consumers, the small and medium enterprises. The topology of the medium voltage (MV) grids is usually radial. The connection of power plants based on renewable energy sources (RES) raises problems in the following aspects:

- Fluctuating bus voltages due to the intermittent operation of the generators;
- Due to the relatively slower network development, lines could possibly be overloaded;
- In grids with high resistance of the lines (small conductor cross-section) an unwanted high-voltage level could be observed nearby the generator connection node;
- Possible deterioration of the power quality due to the inverter-based generation of the RES. An increased level of current and voltage harmonics, as well as voltage flicker could be observed.

A probabilistic power flow algorithm was proposed in [1]. It requires bus load data as set of power values along with the probability for their observation. The parameters and the configuration of the grid are considered unchanged during the calculations. Numerous other papers are dedicated to the improvement and modification of this algorithm [2-4].

In [5-8] the fuzzy-set theory is exploited to make a probabilistic assessment of the power flows. This approach requires that the bus injections are set as intervals (triangular or trapezoidal or any other membership functions) within which the power may vary with a certain probability. A main drawback of the fuzzy power flow algorithms is that the generation and the load values are changed in the same direction (either both are low or both are high). Practically, the situation with the RES in not the same. For instance, the wind is usually more powerful very early in the morning, while the system load at this time is at its lower rates.

This contribution proposes a novel and effective algorithm, based on the Monte Carlo method. The algorithm accounts the uncertainty and evaluates the impact of the RES along with the deviation of the bus loads on the power flows and the voltages in the grid. The probability density function of the bus power injections for simplicity is chosen to be uniform. The obtained results allow immediate assessment of the probability to observe overloaded lines and transformers. An appropriate control schemes of the power plants can be determined, in order to maintain reasonable voltages.

The paper continues with a presentation of the algorithm. Results from a test case study are discussed in section III. Section IV draws the main conclusions.

II. ALGORITHM

To be adequate, the algorithm should be consistent with the actual situation of the EPS control (dispatching). In this sense, it is clear that the conventional power plants actively participate in the power and frequency control of the system. Power plants based on RES usually do not provide such services, because of their intermittent wind or solar power.

Therefore, the modern EPS have two sources of uncertainty – the bus loads and the generators based on RES. Thus, the RES can be considered as negative loads. The resulting EPS model has higher degree of uncertainty of the system load.

The proposed algorithm is based on generation of random bus power injections. As a result N random cases are formulated and then solved by the Newton-Raphson method.

[1]Nikolay Nikolaev is with Department "Electric Power Engineering" at Technical University of Varna, Studentska str. 1, Varna 9010, Bulgaria, E-mail: n.nikolaev@tu-varna.bg

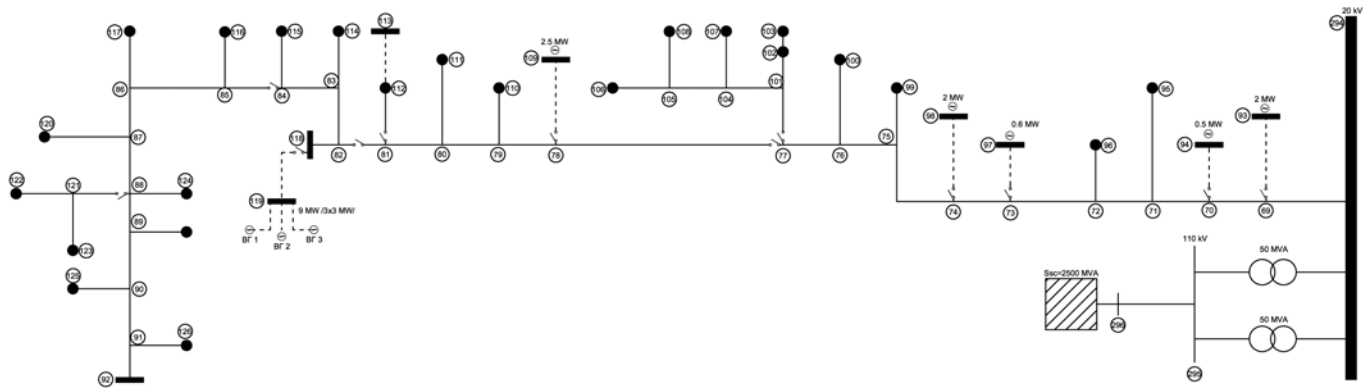

Fig. 1. Single-line diagram of one of the MV feeders of the studied substation

The main idea is to check for overloaded lines or transformers for each random case. Let *M* be the number of cases which do not show any overloading. According to the Chernoff's bound [9], the probability for correct assessment ($P_{P_{NO}}$) of the probability for normal operation of the grid (P_{NO}), is evaluated with the following inequality:

$$P_{P_{NO}}\left\{P_{NO} \geq M / N - \varepsilon\right\} \geq 1 - e^{-2\cdot\varepsilon^2\cdot N} \qquad (1)$$

In other words $1-e^{-2\cdot\varepsilon^2\cdot N}$ is the minimal probability that the probability for normal operation of the grid is higher than $P_{NO} \geq M / N - \varepsilon$. Where ε is the deviation error and is usually set a small value (for example 0.05 which is 5 % deviation). Thus, the more the solved cases *N* and the smaller the deviation error, the higher the probability for correct assessment of the probability for normal operation of the grid.

For the implementation of the algorithm with the Monte Carlo method, the following formulation of the grid's power injection model is convenient [10, 11]:

$$\mathbf{0} = \dot{\mathbf{V}} \cdot conj\left(\dot{\mathbf{Y}} \cdot \dot{\mathbf{V}}\right) + \dot{\mathbf{S}}_{\mathbf{inj}} \qquad (2)$$

where $\dot{\mathbf{V}}$ is a column-vector consisted of the complex bus voltages, $\dot{\mathbf{Y}}$ is a square matrix of the network admittances and $\dot{\mathbf{S}}_{\mathbf{inj}}$ is a column-vector of the generators and loads bus power injections. Thus, $\dot{\mathbf{S}}_{\mathbf{inj}}$ is assigned as a variable, randomly changed for each case *N*.

The proposed algorithm is executed in the following stages:

- First, the minimum and maximum injected bus power for each generator and load are specified - $\dot{S}_{inj,\min}$ and $\dot{S}_{inj,\max}$. For the bus loads this could be annual, monthly or daily minimum and maximum values. For generators based on RES the min and max power is set from zero to the rated value. For conventional generators which participate in the system active power and frequency control the power is allowed to vary within the physically admissible limits. An equal min and max power is set to those conventional generators which do not participate in the active power and frequency control of the system (the nuclear power plant of Bulgaria usually operates at constant power). Finally, two vectors with the minimum and maximum injected power are composed - $\dot{\mathbf{S}}_{\mathbf{inj,min}}$ and $\dot{\mathbf{S}}_{\mathbf{inj,max}}$.
- Next a randomly generated matrix $\mathbf{D}$ is created with elements values within the interval $[0,1]$. This is easily implemented with the following command in MATLAB®: D=rand(n,N). Where *n* is the number of buses. The matrix $\mathbf{D}$ can also be represented as a row of *N* column-vectors $\mathbf{D} = [\mathbf{d_1}, \mathbf{d_2}, ..., \mathbf{d_N}]$. Each vector $\mathbf{d}_i$ refers to a random power flow case, where $i = 1, 2, ..N$.
- This stage is repeated N times and consists of the following steps:

Step 1. The vector with randomly generated bus injections is created with the following formula:

$$\dot{\mathbf{S}}_{\mathbf{inj}} = \dot{\mathbf{S}}_{\mathbf{inj,min}} + \left(\dot{\mathbf{S}}_{\mathbf{inj,max}} - \dot{\mathbf{S}}_{\mathbf{inj,min}}\right) .* \mathbf{d}_i \qquad (3)$$

In (3) the sign '.*' stands for element-wise multiplication.

Step 2. The total load of the system P_{load} is calculated, as well as the total power generated by RES - P_{RES}. The difference between these two power gives the remaining load that must be covered by the conventional generators $P_{conv,need} = P_{load} - P_{RES}$. The total power generated by conventional power plants is also calculated - P_{conv}.

Step 3. Since all previously calculated power are based on random numbers varying within certain limits, in general $P_{conv,need} \neq P_{conv}$, i.e. there will be lack or excess of power produced by conventional generators. Therefore, it is necessary to correct their power in response to the remaining system load that has to be covered. That is why the following correction coefficient is calculated:

$$k_{corr} = P_{conv,needed} / P_{conv} \qquad (4)$$

This correction coefficient multiplies the power of all conventional generators. Then, if there are generators with power beyond the specified limits their power is fixed correspondingly to the upper or lower bound. After that, (4) is calculated again and the power of the generators that have not been limited yet is corrected. This loop repeats over, until $k_{corr} \approx 1$ or until all generators hit their limit power.

Step 4. Now (2) is solved with the corrected vector $\dot{\mathbf{S}}_{\mathbf{inj}}$ by using the Newton-Raphson method [10-12]. Finally, the power flows are evaluated and compared to the maximum allowed. If there are no violations, the number of the normal operations of the grid is increased by one $M = M + 1$. But if there are cases with overloaded elements, they are recorded. After the calculations a statistical information about the overloaded elements is displayed.

III. Study on a Medium Voltage Grid

Part of the studied MV grid is depicted in Fig. 1. For the sake of the study an entire MV grid of a real 110/20 kV substation, situated in north-eastern Bulgaria is modeled (about 300 buses). The main wind power potential of the country is concentrated in this region. That is why many small-scale wind farms are built and connected to the MV grids in the region. Fig. 1 depicts only one of the feeders of the substation. There are six wind farms connected to the line. The total length of the feeder is about 40 km. The line is constructed with overhead ACSR-95 mm^2 conductors.

A 1000 randomly generated power flow cases are calculated for the following situations:

- *Situation 1* – all generators are considered to have known active and reactive power at unity power factor;
- *Situation 2* – all generators are considered to have known active and reactive power at power factor ±0.95;
- *Situation 3* – all generators are considered to have known voltage magnitude and active power.

As it was clarified in section II, the wind turbine generators may vary their output from zero to the rated power. For the wind turbine connected to bus 119 this is shown in Fig. 2.

Fig. 3 presents the voltage magnitude for the end of the line (bus 92), calculated for the three situations. The plots show that when the wind turbines control operate with a reference reactive power the voltage magnitudes can exceed the allowed upper and lower levels (0.9-1.1 p.u.). The results show that the most favorable operation in terms of voltage level is *situation 3* - control with reference voltage. In this situation the voltage remains within acceptable limits along the entire line.

Fig. 4 presents the voltage magnitude on bus 118, nearby the point of a 9 MW wind farm connection. Due to the high conductor resistance, the voltage in *situation 1* and *situation 2* is significantly increased in order to inject the generated power. Again *situation 3* appears to show normal voltage levels, because the wind farm absorbs reactive power in order to maintain reasonable voltage on the terminals.

The loading level of the line section between bus 294 and bus 69 is presented in Fig. 5. The calculations show that the line has been overloaded several time in *situation 3* only. This is mainly due to the increased reactive power consumption of the wind farms.

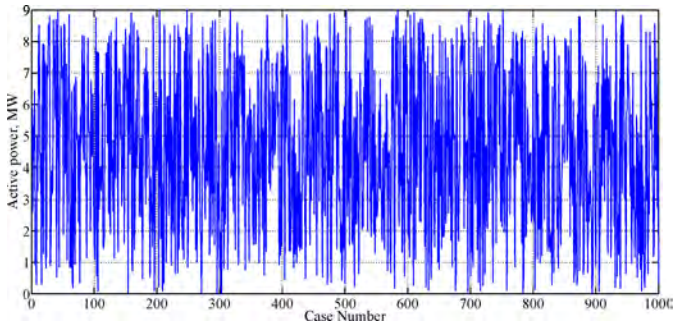

Fig. 2. Active power of the wind farm connected to bus 119

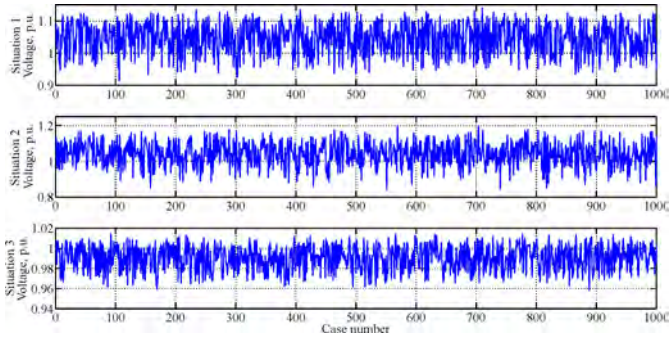

Fig. 3. Voltage magnitude of bus 92

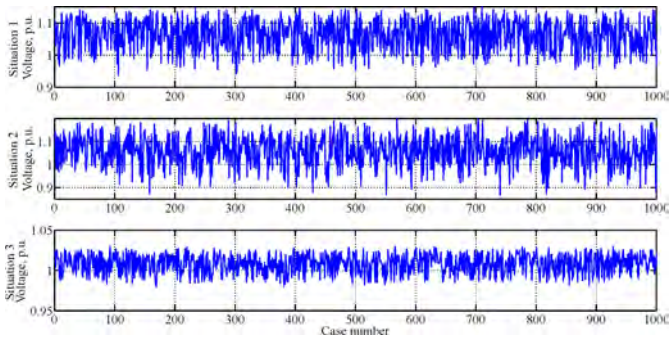

Fig. 4. Voltage magnitude of bus 118

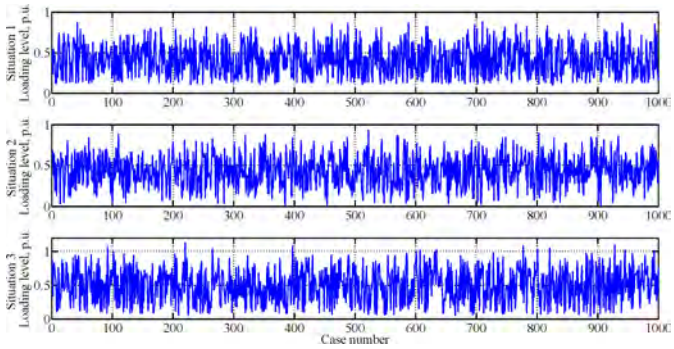

Fig. 5. Loading of line section between bus 294 and bus 69

The computation time for a 1000 cases and a 300 bus network is reasonable. It took only about 5 minutes for each studied situation on an average multi-core processor laptop.

IV. Conclusions

The developed algorithm provides fast probabilistic assessment of the impact of renewable energy sources on the power flows of the medium voltage grids. The algorithm can be easily implemented in any open source software for classical power flow.

The paper presents the application of the algorithm for evaluation of the voltage levels as well as for determining the overloaded grid elements.

Another interesting conclusion is that for MV grids with small cross-section conductors it is preferable to control the wind turbines with reference voltage rather than reference reactive power control. Moreover, the wind turbines would have positive impact on the voltage magnitude in terms of maintaining good levels on the entire line. Along with this, the cross-sections of the first few line sections may need to be increased for precaution of overloading.

Acknowledgement

The author is supported by the Program ”Human Resources Development” of the Bulgarian Ministry of Youth and Education, Project BG051PO001-3.3.06-0005.

References

[1] B. Borkowska, "Probabilistic Load Flow," *Power Apparatus and Systems, IEEE Transactions on,* vol. PAS-93, pp. 752-759, 1974.

[2] A. Meliopoulos, G. Cokkinides, and X. Chao, "A new probabilistic power flow analysis method," *Power Systems, IEEE Transactions on,* vol. 5, pp. 182-190, 1990.

[3] C. Barbulescu, G. Vuc, S. Kilyeni, D. Jigoria-Oprea, and O. Pop, "Transmission Planning – a Probabilistic Load Flow Perspective," *International Journal of Electrical and Electronics Engineering,* vol. 3, pp. 587-592, 2009.

[4] M. Aien, R. Ramezani, and S. Ghavami, "Probabilistic Load Flow Considering Wind Generation Uncertainty," *Engineering, Technology & Applied Science Research,* vol. 1, pp. 126-132, 2011.

[5] R. Kenarangui and A. Seifi, "Fuzzy power flow analysis," *Electric Power Systems Research,* vol. 29, pp. 105-109, 1994.

[6] M. Sarcheshmah and A. Seifi, "A New Fuzzy Power Flow Analysis Based on Uncertain Inputs," *international Review of Electrical Engineering,* vol. 4, pp. 122-128, 2009.

[7] A. Borisly and A. Al-Othman, "Solution of load-flow problem using fuzzy linear regression approach," in *CISST'08 Proceedings of the 2nd WSEAS International Conference on Circuits, Systems, Signal and Telecommunications*, Acapulco, Mexico, 2008, pp. 17-22.

[8] E. Gouveia and M. Matos, "Constrained Fuzzy Power Flow," in *IEEE Power Tech*, Lausanne, 2007, pp. 1314-1319.

[9] B. Polyak and P. Shterbakov, *Robust Stability and Control*: Russian Science Academy, 2002.

[10] P. Kundur, *Power system stability and control*: McGraw-Hill Inc., 1993.

[11] F. Milano, *Power System Modelling and Scripting*: Springer, 2010.

[12] J. Arrillaga and C. Arnold, *Computer analysis of power systems*: John Wiley & Sons Ltd., 1994.