Pspice Simulation of Optoelectronic Circuits of Detectors

Hristo Sabev[1] and Tsanko Karadzhov[2]

Abstract – **The operation of circuits of ionizing radiation detectors, implemented by means of PIN photodiodes, is simulated. Semiconductor optoelectronic detectors of ionizing radiation- silicon and germanium are examined. Two electric circuits for temperature compensation in the performance of optoelectronic detectors of ionizing radiation at low energy levels of ionizing particles in fast and slow changes in temperature are proposed. Simulation of the output voltage of the optoelectronic detectors is implemented.**

Keywords – **Ionizing radiations, PIN photodiodes, PSPICE simulations.**

I. Introduction

Standards for optoelectronic detectors of ionizing radiations are given in [1, 2, 3]. The optoelectronic detectors of ionizing radiations, including PIN photodiodes, are viewed in [4, 5, 6, 7, 8, 10, 11]. The operation of three circuits of ionizing radiation detectors, realized by means of PIN photodiodes, are simulated. They are considered in [9].

II. Optoelectronic Circuits of Detectors

Figure 1 shows a circuit where the PIN photodiode is connected to an AC current circuit. The circuit is used for registering ionizing radiations. The photodiode operates under inverse voltage in photodiode mode. The amplifier DA1 has a high input resistance. A silicon PIN photodiode SFH 520 of large area is used [11].

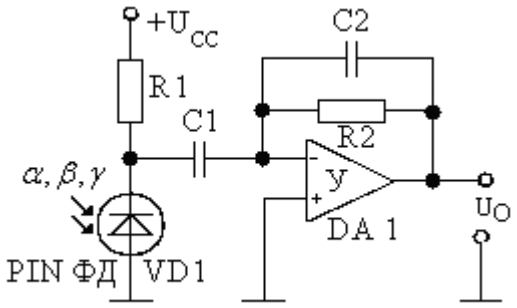

Fig. 1. Circuit where the PIN photodiode is connected

Within the next circuits an operating photodiode (VD1) and a compensating photodiode (VD2) are used.

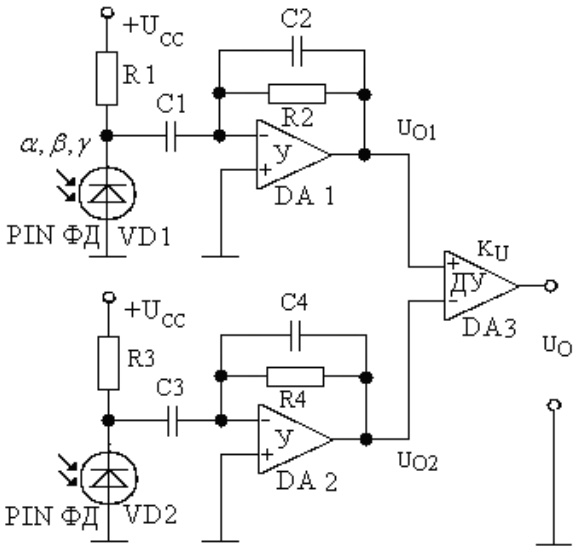

Fig. 2. A detector circuit with compensation of fast temperature changes

The output circuit voltage is:

$$U_O = K_U \cdot I_{ph1} \cdot R_2 \quad (1)$$

$$U_O = K_U \cdot (U_{O1} - U_{O2}) = K_U \cdot [(I_{ph1} + I_{D1}) \cdot R_2 - I_{D2} \cdot R_2] = K_U \cdot I_{ph1} \cdot R_2 \quad (2)$$

When the photodiodes are identical, the two dark currents are equal $I_{D1} = I_{D2}$

where K_U - coefficient of amplification according to the voltage of the differential amplifier *DA3*, I_{ph1} - photocurrent of the PIN photodiode 1, I_{D1}, I_{D2} - dark currents of the PIN photodiodes 1 and 2. The following conditions must be satisfied:

$R1 = R3;\ R2 = R4;\ C1 = C3;\ C2 = C4\ \ Iph2 = 0$ (3)

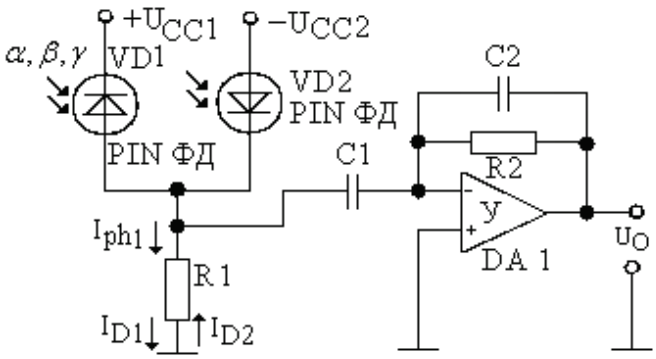

Fig. 3. A detector circuit with compensation of slow temperature changes

[1]Hristo Sabev is with the Faculty of Electrical Engineering and Electronics at Technical University of Gabrovo, 4 H. Dimitar, Gabrovo 5300, Bulgaria.

[2]Tsanko Karadzhov is with the Faculty of Mechanical and Precision Engineering at Technical University of Gabrovo, 4 H. Dimitar, Gabrovo 5300, Bulgaria.

The supply voltages of the circuit are equal $U_{CC1} = U_{CC2}$

The voltage on the resistor R1 is:

$$U_{R1} = [I_{ph1} + (I_{D1} - I_{D2})] . R_1 = I_{ph1} . R_1$$

$$I_{D1} = I_{D2};\ I_{ph2} = 0 \qquad (4)$$

For the circuits in fig. 2 and fig. 3 differential detectors or coordinate (position)-sensitive detectors (PSD) should be used.

For an operation in a wide temperature range the photodiodes of ORTEC company should be used [10]. ORTEC produces photon detectors made of high purity germanium (Ge), of a P or N type with a cryostat.

The circuits in fig. 1, 2 and 3 possess a common basic circuit shown in fig. 4.

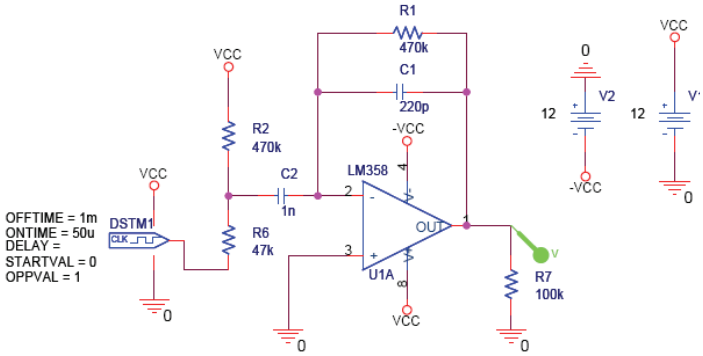

Fig. 4. Basic circuit for PSPICE simulations of optoelectronic detectors

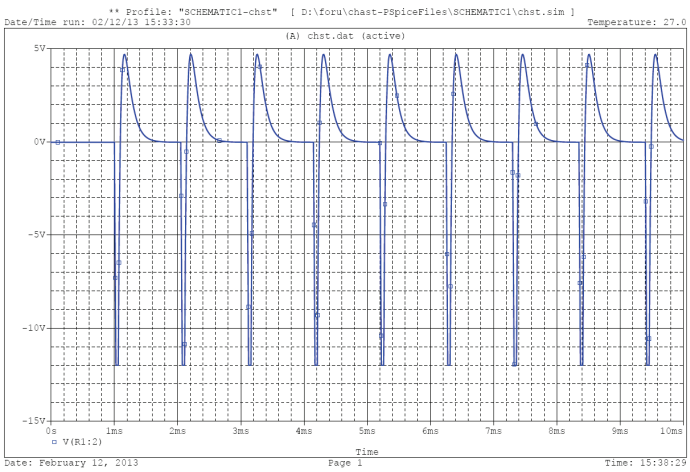

Fig. 4.a. Output voltage of the circuit in fig. 4.

III. Conclusion

Circuits of optoelectronic detectors of ionizing radiation, implemented by means of PIN photodiodes, are simulated. The results from the simulations are compared with those obtained from the calculations and measurements done.

References

[1] БДС 10165:1972. Ядрено уредостроене. Детектори на йонизиращи излъчвания полупроводникови с електронно-дупчест преход, силициеви спектрометрични. Технически изисквания.

[2] ГОСТ 26222-86. Детекторы ионизирующих излучений полупроводниковые. Методы измерения параметров.

[3] ГОСТ 20766-75. Детекторы ионизирующих излучений полупроводниковые спектрометрические. Типы и основные параметры.

[4] Колев, И. С. и Е. Н. Колева. Инфрачервена оптоелектроника. (Второ преработено и допълнено издание). Габрово, Унив. изд. "В.Априлов", 2008, ISBN 978 -954-683-402 -7.

[5] Колев, И. С. и Е. Н. Колева. Кохерентна оптоелектроника. Пловдив, Автоспектър, 2008, ISBN 978-954-8932-46-2.

[6] Колев, И. С. и Е. Н. Колева. Некохерентна оптоелектроника. Габрово, Унив. изд. "В. Априлов", 2007, ISBN 978-954-683-373-0.

[7] Колев, И. С . и Е . Н . Колева. Оптоелектроника. Прибори. Елементи. Приложения. София, Техника, 2007, ISBN 978-954-03-0670-4.

[8] Колев, И. С. и Е. Н. Колева, Оптоелектронни сензори и оптоелектронни охранителни системи. Габрово, Унив. изд. "В. Априлов", 2009, ISBN 978 – 954 – 683 – 420 – 1.

[9] И. С. Колев, Е. Н. Колева и Х. П. Събев. Оптоелектронни детектори на йонизиращи лъчения . Optoelectonic Detectors for Ionizing Radiations. International Scientific Conference, UNITECH, 2012, Gabrovo, 16-17.XI.2012, Proceedings, vol. 1, I-209, I- 214.

[10] ORTEC. Semiconductor Photon Detectors, 2012.

[11] Siemens Semiconductor Group. SFH520 - α-β-γ-Strahlungsdetektoren. α-β-γ- Radiation Detectors, 2000.

[12] Александров Б., "Развитие на методите за защитно кодиране при съхранение и обмен на информация в компютърните системи", дисертационен труд: 2001г., 152 стр.

[13] B. Aleksandrov, N. Siniagina, P. Kochevski; "Secret Sharing Based on the Residue Theorem"; Jornal og Communication and Computer; David Publishing Company, US, vol. 9, number 2, 2012; pp.148÷154; (www.davidpublishing.com/journals)