Chaotic Signals in Radiocommunication Generated by some Circuits

Stoitscho V. Manev[1] and Vladimir Iv. Georgiev[2]

Abstract - **In this paper some chaotic generators are suggested. Analytical description of some of the proposed devices has been made. Working prototypes of the suggested circuits have been developed. Some experimental investigations have been carried out.**

Keywords - **Chaotic circuits, Chua's circuit**

I. INTRODUCTION

There is widespread interest of generation and examination of chaotic signals. Especially generation of chaotic signals is discussed in many papers. Devices, designed for this purpose, can be used in communication for synchronization, control, masking etc..This work is aimed to show the structure of some devices, designed to generate chaotic signals. A survey of some variants has been made. Working prototypes of the proposed circuits have been developed.

Chua's circuits generators can be divided in the following subclasses [1]:

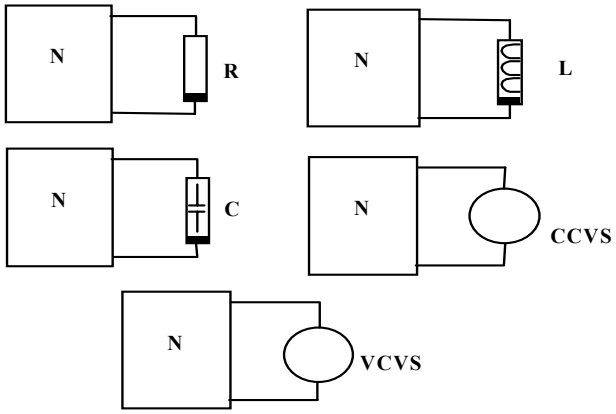

Fig.1.

Several groups[1] belong to the first class. They are displayed on Fig.2 [1]:

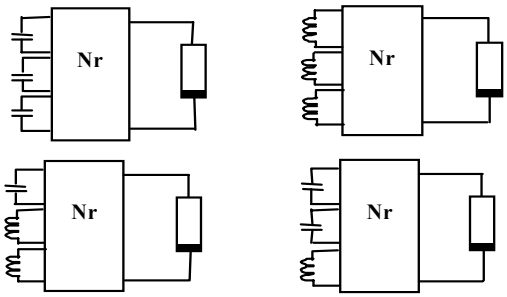

Fig.2.

[1]Stoitscho Velizarov Manev - assistant in Dept. of Radiotechnic in Faculty of Communication and Communication Technologies in TU-Sofia

[2]Vladimir Ivanov Georgiev - professor DSc. in Dept. of Theoretical Electrotechnic in TU-Sofia

The blocks, denoted Nr, contain only resistive elements [1].

II. CLASSIFICATION

In the presented work some variants are discussed:

1) RC circuits with negative resistance: modified generator, designed to produce chaotic signals, based on Wien - bridge generator.

2) LC devices, designed to generate chaotic signals: Y-generator, Z - generator, H - generator.

3) 4 - D generator

Additional group of circuits, designed to obtain chaotic signals, based on the canonical realization of Chua's circuit, is discussed in [8].

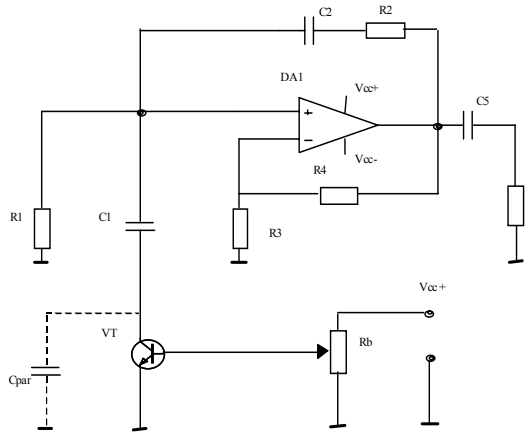

1. Modified RC generator with negative resistance

In [3] a modified Wien generator has been examined. The circuit design is displayed on Fig.3[3]. As a nonlinear element a bipolar transistor has been used.

Fig.3.

Besides the design of this nonlinear element, included in the feedback, is non-conventional. Usually such design, with galvanic separation of the nonlinear element, is used in systems with functional amplitude stabilization of the oscillations using automatic control, where the nonlinear element is included in the negative feedback. Here, on the contrary to this way of design, the nonlinear element is included in the positive feedback [3]. This is acceptable, because of the unusual purpose of the discussed generator. Unlike traditional Wien generator, where the stabilization of the amplitude of the oscillations is the aim, in the variant, presented in [3], the aim is chaotic signals to be produced.

The transistor can be biased, varying the voltage values. It allows further investigations of the dependence of the output chaotic signal from the value of the base voltage to

be carried out. The equations, describing the processes in the circuit, are as follows [3]:

$$\begin{aligned} C_2.\dot{U}_2 &= I_{out} \\ C_1.\dot{U}_1 &= -(U_1 + U_{TR})/R_1 \\ I_{out} &= (U_{out} - U_1 - U_2 - U_{TR})/R_2 \\ U_{out} &= k.U_1 \\ k &= R_4/R_3 + 1 \end{aligned} \quad (1)$$

If a piecewise linear approximation, shown in [2], is applied, results, similar to obtained there, are received [3]:

$$I_{TR}(U_{TR}) = \begin{cases} U_{TR}/R_{OTR}^{(1)} & U_3 < U^*, \\ U^*/R_{OTR}^{(1)} + (U_{TR} - U^*)/R_{OTR}^{(2)} & U_3 > U^* \end{cases} \quad (2)$$

where: $R_{0TR}^{(2)} > R_{0TR}^{(1)}$.

Assuming: R1 = R2 = R ; C1 = C2 = C, after introducing the dimensionless quantities[3]:

$$\frac{U_2}{U^*} = x; \quad \frac{U_1}{U^*} = y; \quad \frac{U_{TR}}{U^*} = z; \quad \frac{t}{RC} = t;$$

$$\frac{C}{C_{PAR}} = c; \quad \frac{R}{R_{OTR}^{(1)}} = \alpha; \quad \frac{R}{R_{OTR}^{(2)}} = \beta; \quad (3)$$

$$N(z) = \begin{cases} \alpha.z; & if \quad z \le 1 \\ \alpha + \beta.(z-1); & if \quad z > 1 \end{cases}$$

and following the way, presented in [2], the equations become[3]:

$$\begin{aligned} \dot{x} &= (z + y)(k - 1) - x \\ \dot{y} &= (z + y)(k - 2) - x \\ \dot{z} &= c[(z + y)(k - 2) - x - N(z)] \end{aligned} \quad (4)$$

The equations (4), describing the processes in the discussed circuit, are similar to the well known relations[2], concerning the RC chaotic devices.

2. LC generators for chaotic signals

In what follows three versions of such a generators will be considered.

2.1.H generator

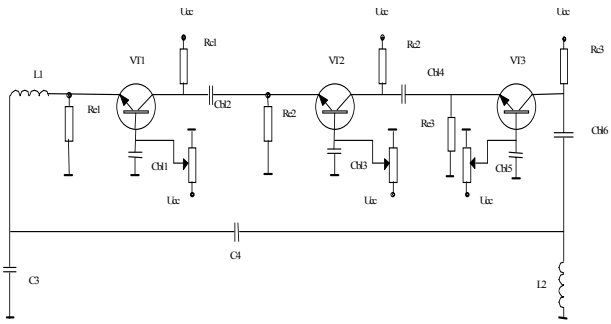

Fig.4.

The investigations, carried out in [4], demonstrated the opportunity of producing chaotic signals by means of LC oscillators from H-type. The proposed circuit [4] allows a variety of another experiments, such as: investigation of the dependence between the characteristics of the obtained chaotic signal and the voltage of the supplying source, exploring the influence of the tolerances of the passive elements etc., to be carried out. Next step of investigations might be the exploration of the non-autonomous regimes of the proposed oscillator. The presence of chaotic regime in the discussed LC generator allows it's implementation in telecommunication in the processes of synchronization, modulation, demodulation etc..

2.2.Y- generator

In [5] a Y- type generator has been analyzed. It has been designed, following the design of the well known circuit with two inductors and one capacitor. Unlike the known variants, where this circuit has been analyzed from the point of view of generating sinusoidal oscillations, in [5] generation of chaotic signals is to be produced. The circuit is presented on Fig.5[5].

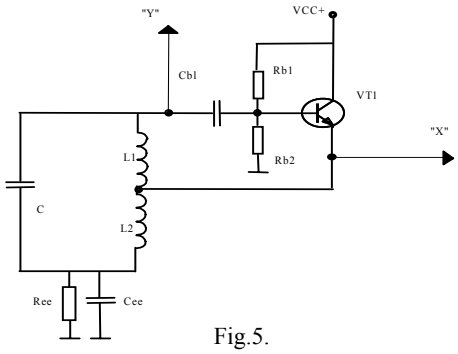

Fig.5.

Apparently, achieving this purpose, namely producing of chaotic signals, a proper choice of the values of the components in the circuit, is necessary to be made.

2.3. Z - generator

In [6] a two-stage device with several feedbacks has been realized. The circuit is presented on Fig.6.

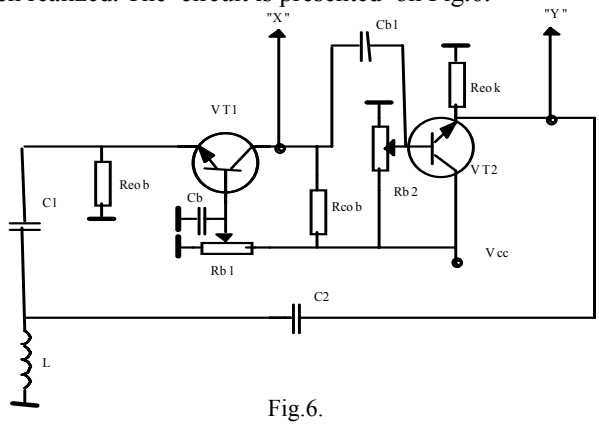

Fig.6.

The value of the input impedance of the first stage is low. The second stage is an emitter follower with low value of it's output impedance. In such a way the resultant active part of the circuit approaches to the ideal variant, necessary for design of Z generators.

3. Four - dimensional chaotic generator

In [7] 4-D chaotic generator with modified external driven nonlinearity is presented. A new circuit with modified driven nonlinearity has been proposed. The variant, suggested in [7], is presented on Fig.7.

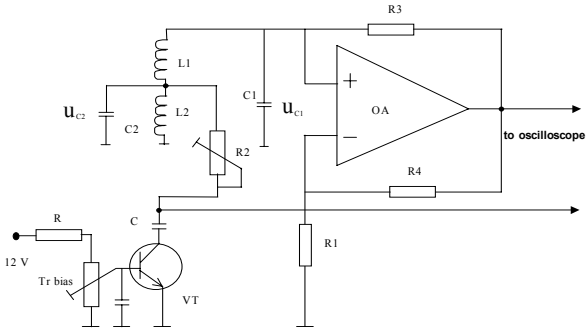

Fig.7.

In the circuit, proposed in [7] (Fig.7), the nonlinearity in the characteristic of the bipolar transistor has been used.

The equations, concerning the presented there variant, are[7]:

$$\frac{du_{C_1}}{dt}\cdot\frac{1}{u_0}=\frac{1}{C_1}\cdot\frac{i_{L_1}}{u_0}-\frac{1}{R_1.C_1}\cdot\frac{u_{C_1}}{u_0}$$

$$\frac{du_{C_2}}{dt}\cdot\frac{1}{u_0}=\frac{1}{C_2}\cdot\frac{i_{L_1}}{u_0}-\frac{1}{C_2}\cdot\frac{i_{L2}}{u_0}-\frac{1}{R_2.C_2}\cdot\left(\frac{u_{C_2}}{u_0}-1\right).\eta\,(\frac{u_{C_2}}{u_0}-1) \qquad (5)$$

$$\frac{di_{L_2}}{dt}\cdot\frac{1}{u_0}=\frac{1}{L_2}\cdot\frac{u_{C_2}}{u_0}$$

$$\frac{di_{L_1}}{dt}\cdot\frac{1}{u_0}=\frac{1}{L_1}\cdot\frac{u_{C_1}}{u_0}-\frac{1}{L_1}\cdot\frac{u_{C_2}}{u_0}$$

Assuming [7]:

$$\frac{L_1.i_{L1}}{u_0}=w \qquad \frac{u_{C_1}}{u_0}=y \qquad \frac{1}{L_1.C_1}=\alpha \qquad \frac{1}{L_1.C_2}=\gamma \qquad (6)$$

$$\frac{L_2.i_{L2}}{u_0}=x \qquad \frac{u_{C_2}}{u_0}=z \qquad \frac{1}{R_1.C_1}=\beta \qquad \frac{1}{C_2.R_2}=\theta$$

$$\frac{1}{L_2.C_2}=\lambda$$

the system has been presented in normalized form [7]:

$$\frac{dy}{dt}=\alpha..w-\beta.y \qquad (7)$$

$$\frac{dz}{dt}=\gamma.w-\lambda.x-\theta.(z-1).\eta.(z-1)$$

$$\frac{dx}{dt}=z$$

$$\frac{dw}{dt}=y-z$$

Using the obtained equations, the processes in the developed variant can be described analytically.

III.EXPERIMENTAL RESULTS

Here bellow some experimental results have been displayed.

1. RC generator

First of all the driving point is fixed in the linear part of the characteristic, it allows output signals with form, similar to the sinusoidal, to be obtained. Moving gradually the driving point in the nonlinear part of the transistors characteristic, changing the value of Rb, results, shown on Fig.8, are produced[3].

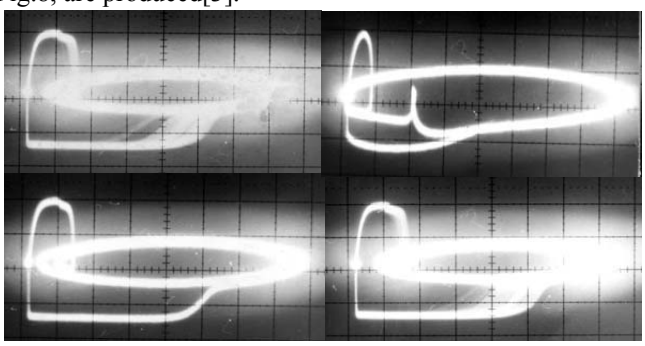

Fig.8.

The changes in the output signal, observed in the phase plane, are obvious from the photos. The investigations have been done under following data conditions [3]:

DA1 - MAA741C; VT - 2T3608; VCC+ = +12V; VCC- = =-12V; C1 = C2 = C = 47nF; R1 = R2 = R = 1.56k; C5 = =10uF; Rb = 47k; R3 = 0.4k; R4 = 1k.

2.1. H –generator

The circuit with the specified values of the elements is presented bellow [4]:

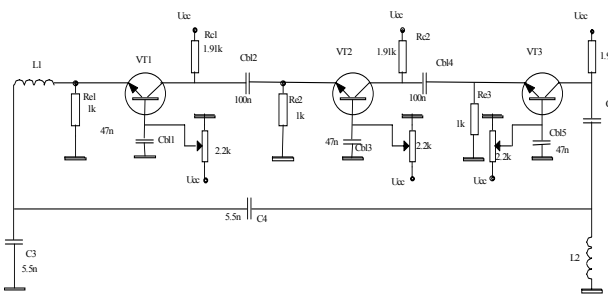

VT1,VT2,VT3 - 2T3306; Vcc = 15V; L1 = L2 = 41uH ;

Fig.9.

The trajectories have been observed in the phase plane on oscilloscope.The photos are presented on Fig.10[4].

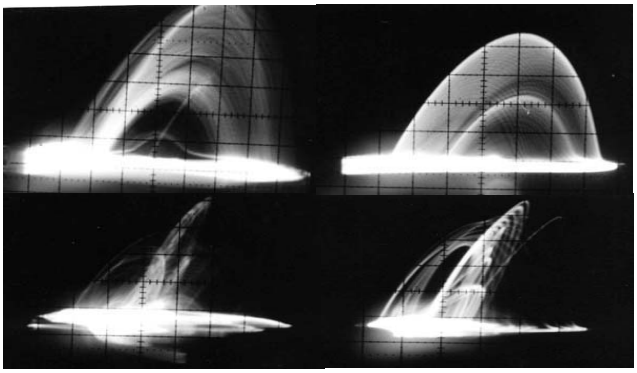

Fig.10.

The conclusion is, that the version, proposed in [4], is suitable to obtain different types of chaotic signals.

2.2. Y- generator

The investigations have been done under following data conditions[5]:VT1 - 2T6551; Vcc+ = 10V; C = 6,8nF; Cbl = = 10uF; Ree = 1,8k; Cee = 1uF; Rb1 = 43k; Rb2 = 9.4k; L1 = 1.7uH; L2=3.5uH. Photos, indicating the trajectories, observed in the phase plane, are shown on Fig.11[5].

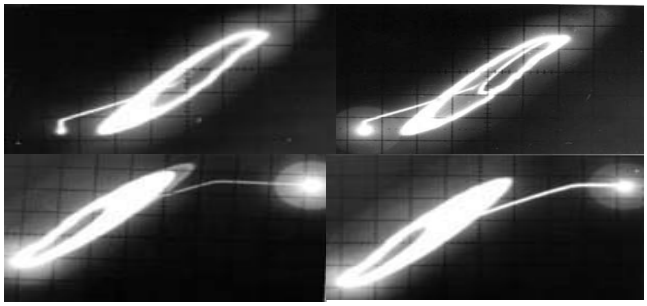

Fig.11.

The experiments show, that the circuit, proposed in [5], successfully can be used for producing of chaotic signals.

2.3. Z - generator

The investigations have been done under following data conditions: VT1,VT2 - 2T3306; Vcc=10V; L=52uH; Rb1= = Rb2 = 2.2k; Reob = Reok = 1k; Rcob = 1k; C2 = C1 = = 10.2nF; Cbl = 470nF; Cb = 1uF [6].

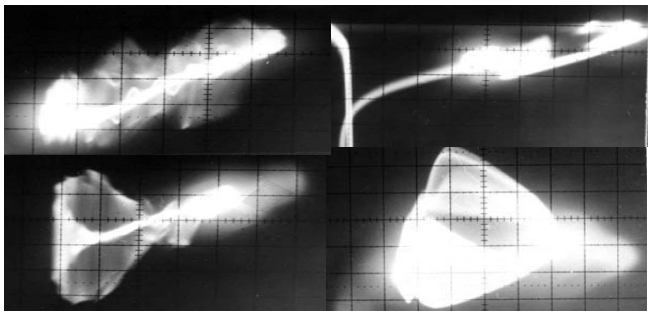

Fig.12.

The trajectories in the phase plane are displayed above on Fig.12[6]. The presence of chaotic signals is obvious.

3. Four-dimensional chaotic generator

The circuit with the specified values of it's elements is presented on Fig.13 [7].

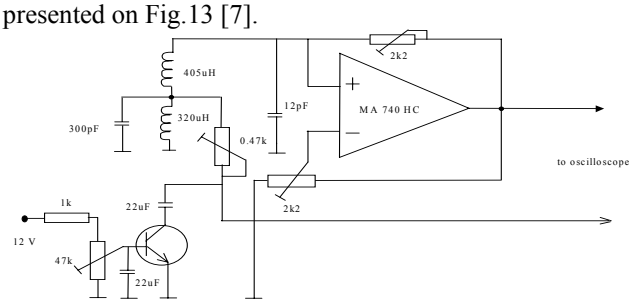

Fig.13.

The main advantage of the variant, proposed in [7], is the driven nonlinearity. It has been designed using bipolar transistor. Changing the voltage on the base of the transistor the dynamical parameters of the nonlinearity can be controlled. This leads to adequate change in the oscillations of the proposed device. In such a way, a variety of output signals can be obtained. The suggested device has been practically developed.

Another experimental setup, concerning the modified driven nonlinearity, has been realized. An appropriate calculating procedure has been developed. Numerous experiments on the working prototype have been made. Some trajectories of the output signal of the working prototype have been observed in the phase plane [7].

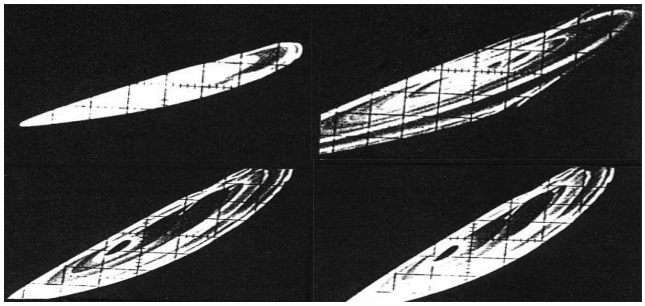

Fig.14.

The photos, displayed above [7], prove that with appropriate choice of the values of the elements in the proposed variant, chaotic signals can be obtained.

IV. Conclusions

* Some versions of circuits, designed to generate chaotic signals, have been proposed and discussed.
* Each one produces chaotic signals with parameters, depending from the structure of the analyzed devices and the values of their's components.
* The suggested circuits have been developed in practice.
* Variety of experiments on the working prototypes have been made.
* For some variants ([3], [7]) mathematical analysis on the equations, describing the processes in the proposed circuits, has been made.
* The results, obtained during the physical experiments, confirm the presence of chaotic regime. Photos of the trajectories, observed in the phase plane, have been enclosed.

References

[1] Leon O.Chua, Chai Wah Wu, Anshan Huang and Guo-Qun Zhong,"A universal circuit for studying and generating chaos PartII: StrangeAttractors", *IEEE Transactionson circuits and systems-I*, Vol.40, No.10, pp.745 - 761, October 1993.

[2] Namjunas A. and A.Tamasevicius, "Modified Wien - bridge oscillator for chaos", *Electronic Letters,* Vol.31, No.5, 1995.

[3] St.Manev, B.Simeonova, Sl.Lischkov, R.Penev, "RC chaos generator, based on modified Wien - bridge generator", *Proceedings of Session CECS,* pp.32 - 39, *TU-Sofia*, May 1996 (in Bulgarian).

[4] St.Manev, Il.Iliev, R.Penev, "H - LC oscillators for chaotic signals", *Proceedings of Telecom'96,* pp.308 - 313, *Varna,* October 1996 (in Bulgarian).

[5] St.Manev, R.Penev, Il.Iliev,"Y - LC oscillators for chaotic signals" , *Proceedings of Session CECS,* pp.24 - 31, *TU - Sofia* May 1996 (in Bulgarian).

[6] St.Manev, R.Penev, Il.Iliev,"Z - LC oscillators for chaotic signals", *Proceedings of Session CECS* , pp.16 - 23, *TU-Sofia,* May 1996 (in Bulgarian).

[7] St.Manev, "4-D chaotic generator using modified external driven nonlinearity", *Proceedings of Telecom'99,* pp.288 - 293, *Varna* , October 1999 (in Bulgarian).

[8] St.Manev, Vl.Georgiev, "Study of some circuits in Radio Communication designed to generate chaotic signals", *XXXVII ICEST , Nis,* 2 - 4 October 2002.